इंटरनेट मानक

Disclosure to Promote the Right To Information

Whereas the Parliament of India has set out to provide a practical regime of right to information for citizens to secure access to information under the control of public authorities, in order to promote transparency and accountability in the working of every public authority, and whereas the attached publication of the Bureau of Indian Standards is of particular interest to the public, particularly disadvantaged communities and those engaged in the pursuit of education and knowledge, the attached public safety standard is made available to promote the timely dissemination of this information in an accurate manner to the public.

"जानने का अधिकार, जीने का अधिकार"
Mazdoor Kisan Shakti Sangathan
"The Right to Information, The Right to Live"

"पुराने को छोड नये के तरफ"
Jawaharlal Nehru
"Step Out From the Old to the New"

IS 1255 (1983): Code of practice for installation and maintenance of power cables up to and including 33 kV rating [ETD 9: Power Cables]

"ज्ञान से एक नये भारत का निर्माण"
Satyanarayan Gangaram Pitroda
"Invent a New India Using Knowledge"

Act Number 22 of 2005
The Indian Parliament
RIGHT TO INFORMATION

Made Available By
Public.Resource.Org

"ज्ञान एक ऐसा खजाना है जो कभी चुराया नहीं जा सकता है"
Bhartṛhari—Nītiśatakam
"Knowledge is such a treasure which cannot be stolen"

BLANK PAGE

BRUTUM FULMEN

IGNORANTIA JURIS NON EXCUSAT

PROTECTED BY COPYRIGHT

Indian Standard

CODE OF PRACTICE FOR INSTALLATION AND MAINTENANCE OF POWER CABLES UP TO AND INCLUDING 33 kV RATING

(Second Revision)

Third Reprint APRIL 1999

UDC 621.315.21.004.5 : 006.76

© *Copyright* 1984

BUREAU OF INDIAN STANDARDS
MANAK BHAVAN, 9 BAHADUR SHAH ZAFAR MARG
NEW DELHI 110002

Gr 13 *December* 1984

Indian Standard

CODE OF PRACTICE FOR INSTALLATION AND MAINTENANCE OF POWER CABLES UP TO AND INCLUDING 33 kV RATING

(Second Revision)

Power Cables Sectional Committee, ETDC 59

Chairman	*Representing*
SHRI M. L. DONGRE	Bombay Electric Supply & Transport Undertaking, Bombay
Members	
SHRI S. M. SAKHALKAR (*Alternate* to SHRI M. L. DONGRE)	
SHRI J. P. AGAL	Bharat Heavy Electricals Ltd, Hyderabad
SHRI B. P. RAI (*Alternate*)	
SHRI M. R. BHAT	Tata Consulting Engineers, Bombay
SHRI D. K. BASU (*Alternate*)	
CHIEF ENGINEER (ELECTRICAL) I	Central Public Works Department, New Delhi
SURVEYOR OF WORKS (ELECT) V (*Alternate*)	
DR K. DAS GUPTA	Calcutta Electric Supply Corporation (India) Ltd, Calcutta
SHRI P. NEOGI (*Alternate*)	
DIRECTOR	Central Power Research Institute, Bangalore
SHRI M. C. RAIRA (*Alternate*)	
DIRECTOR OF MINES SAFETY (ELECT) (HQ)	Directorate General of Mines Safety, Dhanbad
DIRECTOR OF MINES SAFETY (ELECT) (*Alternate*)	
SHRI RAVI K. DUTT	Cable and Conductor Manufacturers' Association of India, New Delhi
SHRI K. G. WARRIER (*Alternate*)	
SHRI P. GHOSE	Indian Cable Co Ltd, Jamshedpur
SHRI S. BHATTACHARYA (*Alternate*)	
SHRI M. M. HONAVAR	Cable Corporation of India Ltd, Bombay
SHRI K. G. MATHEW (*Alternate*)	
SHRI K. S. JOSHI	Bombay Suburban Electric Supply Ltd, Bombay
SHRI R. K. SHRGAI (*Alternate*)	
SHRI S. T. KAKKAR	Universal Cables Ltd, Satna
SHRI R. C. AGRAWAL (*Alternate*)	

(*Continued on page 2*)

© *Copyright* 1984
BUREAU OF INDIAN STANDARDS
This publication is protected under the *Indian Copyright Act* (XIV of 1957) and reproduction in whole or in part by any means except with written permission of the publisher shall be deemed to be an infringement of copyright under the said Act.

(*Continued from page* 1)

Members	*Representing*
SHRI R. K. MITAL	Delhi Electric Supply Undertaking, New Delhi
SHRI M. K. AHUJA (*Alternate*)	
LT-COL S. S. MOHANTY	Controllerate of Inspection Electronics, Bangalore
SHRI A. L. KHANNA (*Alternate*)	
SHRI B. K. MUNDHARA	Oriental Power Cables Ltd, Kota
SHRI A. K. JAIN (*Alternate*)	
SHRI R. V. NARAYANAN	Directorate General of Supplies & Disposals (Inspection Wing), New Delhi
SHRI D. R. CHANDRA (*Alternate*)	
SHRI H. M. PAI	The Federation of Electricity Undertakings of India, Bombay
SHRIMATI C. BALIGA (*Alternate*)	
SHRI H. C. PANDE	Directorate of Technical Development & Production (Air), New Delhi
SHRI V. K. SHARMA (*Alternate*)	
SHRI S. N. PARWAL	The Premier Cable Co Ltd, Ernakulam (Kerala)
SHRI A. K. RAMAN	Asian Cables Corporation Ltd, Bombay
SHRI L. K. SANGHI	Fort Gloster Industries Ltd, Howrah
SHRI A. S. BHATTACHARJEE (*Alternate*)	
DR M. S. SIKHON	Punjab Research Institute, Rajpura
SHRI U. S. VERMA	National Test House, Calcutta
SHRI R. RAMAKRISHNA (*Alternate*)	
SHRI S. P. SACHDEV, Director (Elec tech)	Director General, BIS (*Ex-officio Member*)

Secretary

SHRI K. M. BHATIA
Senior Deputy Director (Elec tech), BIS

Panel for Code of Practice for Installation and Testing of Cables, ETDC 59/P6

Convener

SHRI M. M. HONAVAR	Cable Corporation of India Ltd, Bombay

Members

SHRI A. S. PURANDARE (*Alternate* to SHRI M. M. HONAVAR)	
SHRI R. CHANDRAMOULI	Tata Hydro Electric Power Supply Co Ltd, Bombay
SHRIMATI C. BALIGA (*Alternate*)	
SHRI P. CHATTERJEE	Indian Cable Co Ltd, Jamshedpur
SHRI S. BHATTACHARYA (*Alternate*)	
SHRI M. L. DONGRE	Bombay Electric Supply & Transport Undertaking, Bombay
SHRI S. M. SAKHALKAR (*Alternate*)	
SHRI P. N. MATHUR	Fort Gloster Industries Ltd, Calcutta
SHRI O. P. KULSHRESHTHA (*Alternate*)	
SHRI J. V. MEHTA	Ahmedabad Electricity Co Ltd, Ahmadabad
SHRI B. K. MUNDHARA	Oriental Power Cables Ltd, Kota
SHRI R. C. MITTAL (*Alternate*)	
SHRI B. ROY CHOWDHURY	Calcutta Electric Supply Corporation (India) Ltd, Calcutta
SHRI P. NEOGI (*Alternate*)	
SHRI R. K. SEHGAL	Bombay Suburban Electric Supply Ltd, Bombay
SHRI M. N. JOGLEKAR (*Alternate*)	

CONTENTS

		Page
0.	Foreword	5
1.	Scope	6
2.	Terminology	6
	SECTION 1 SELECTION OF CABLES	
3.	Types of Cables and Their Applications	7
4.	Guidelines for Selection and Planning of Cable Installation	7
	SECTION 2 GENERAL	
5.	Guidelines for Cable Laying and Installation	13
6.	Methods of Cables Laying and Installation	16
7.	Packing, Transport and Storage	24
	SECTION 3 LAYING AND INSTALLATION	
8.	General	25
9.	Trenching	29
10.	Laying of Cables	30
11.	Reinstatement	35
12.	Jointing of Cables	36
13.	Earthing and Bonding	57
	SECTION 4 TESTING OF CABLE INSTALLATION	
14.	Testing and Electrical Measurements of Cable Installations	58
15.	Cable Installation Plan	61
	SECTION 5 MAINTENANCE	
16.	Maintenance of Cable Installation	61
	SECTION 6 FAULT LOCALIZATION	
17.	Fault Localization of Cable	63
	Appendix A Constructional Details of Power Cables	78
	Appendix B Relative Merits/Demerits of Different Methods of Cable Laying	84

AMENDMENT NO. 1 JULY 1990
TO
IS : 1255 - 1983 CODE OF PRACTICE FOR INSTALLATION AND MAINTENANCE OF POWER CABLES UP TO AND INCLUDING 33 kV RATING

(Second Revision)

(*Page* 7, *clause* **4.2.1.2**) — Insert the following after **4.2.1.2**:

'**4.2.1.3** *Route indicators* — Power cable route indicators should be provided at an interval not exceeding 200 M and also at turning points of the power cable route wherever practicable.'

(*Page* 17, *clause* **6.3.3**) — Insert the following after **6.3.3**:

"**6.3.3.1** The power cable should not be laid above the telecommunication cable, to avoid danger to life of the person, digging to attend to the fault in the telecommunication cable.

6.3.3.2 For identification of power cables, the cable protective cover, such as bricks or RCC slabs may be suitably marked by words 'power cable' or 'by the owner'.

6.3.3.3 While laying power cables, the likely interference to existing telecommunication cables should be avoided by referring to and coordinating with the appropriate telecommunication authorities."

(*Page* 60, *Table* 6, *col* 4) — Substitute '15' *for* '5'.

(ETD 9)

Printed at Simla Printing Press, Delhi, India

Indian Standard

CODE OF PRACTICE FOR INSTALLATION AND MAINTENANCE OF POWER CABLES UP TO AND INCLUDING 33 kV RATING

(Second Revision)

0. FOREWORD

0.1 This Indian Standard (Second Revision) was adopted by the Indian Standards Institution on 26 August 1983, after the draft finalized by the Power Cables Sectional Committee had been approved by the Electrotechnical Division Council.

0.2 This standard gives recommendations and guidelines only as applied normally to cable installation techniques. For special applications and installation conditions, it may be necessary to consult cable manufacturers for their guidance.

0.3 Cable jointing and termination practices are briefly described for general guidance. It is desirable to obtain the detailed procedure from the cable manufacturers.

0.4 The cable installations should be carried out to meet the requirements of the Indian Electricity Rules, 1956 and other regulations in force and necessary checks or tests should be carried out prior to commissioning for compliance with such rules and regulations. It is also necessary to consult the local authorities and other public utilities, such as, railways, telegraph and telephone services, and gas and water supply.

0.5 The cable installations should be carried out by authorized persons competent to undertake work under such regulations as may be enforced by the authority concerned in the administration of the Indian Electricity Act, 1910 and rules thereunder, in different states.

0.6 This standard was first published in 1958. The first revision of the standard was undertaken in 1967 to metricize all dimensional requirements. The prevalent practices in the installation and maintenance of paper insulated power cables with copper and aluminium

conductors were also introduced. The second revision of this standard has been undertaken to give latest practices for selection, installation and maintenance of PILC, PVC and XLPE cables.

0.7 For the purpose of deciding whether a particular requirement of this standard is complied with, the final value, observed or calculated, expressing the result of a test, shall be rounded off in accordance with IS : 2-1960*. The number of significant places retained in the rounded off value should be the same as that of the specified value in this standard.

---

1. SCOPE

1.1 This standard gives recommendations and broad guidelines for selection, transportation, laying, jointing, termination, testing, commissioning, maintenance and fault localization of power cables up to and including 33 kV ratings.

This standard applies to cables conforming to IS : 692-1973†, IS : 1554 (Part 1)-1976‡, IS : 1554 (Part 2)-1981§, IS : 7098 (Part 1)-1977‖ and IS : 7098 (Part 2)-1973¶.

1.2 This standard does not apply to installation of cables for special applications, such as, mines, quarries and oil fields where other statutory regulations govern.

2. TERMINOLOGY

2.1 For the purpose of this standard, definitions given in IS : 1885 (Part 32)-1971** shall apply.

---

*Rules for rounding off numerical values (*revised*).

†Specification for paper insulated lead-sheathed cables for electricity supply (*second revision*)

‡Specification for PVC insulated (heavy duty) electric cables: Part 1 For working voltages up to and including 1 100 V (*second revision*).

§Specification for PVC insulated (heavy duty) electric cables: Part 2 For working voltages from 3 3 kV up to and including 11 kV (*first revision*).

‖Specification for cross linked polyethylene insulated PVC sheathed cables: Part 1 For working voltages up to and including 1 100 volts

¶Specification for cross linked polyethylene insulated PVC sheathed cables: Part 2 For working voltages from 3·3 kV up to and including 33 kV.

**Electrotechnical vocabulary: Part 32 Cables, Conductors and accessories for electricity supply.

SECTION 1 SELECTION OF CABLES

3. TYPES OF CABLES AND THEIR APPLICATIONS

3.1 The type of cables covered under this code, their design, performance requirements and methods of testing are covered by standards mentioned under **1.1**. The recommended current carrying capacities of these cables are covered by IS : 3961 (Part 1)-1967* and IS : 3961 (Part 2)-1967†. Indian Standard on recommended current carrying capacities of XLPE cables is under preparation.

3.2 The typical constructional details of power cables along with their preferred applications are given in Appendix A.

4. GUIDELINES FOR SELECTION AND PLANNING OF CABLE INSTALLATION

4.1 The user should ensure the selection of proper type of cable, proper protective coverings for the cable and their correct installation and jointing. For difficult and extra-ordinary conditions, help of cable manufacturers may be taken for selecting proper cable and the installation guidelines.

4.2 The information given under **4.2.1** to **4.2.8** is required for planning, selection and installation of cables.

4.2.1 *General*

4.2.1.1 *Purpose* - The purpose for which cables are required (*see* Appendix A).

4.2.1.2 *Length of the cable route* - While measuring the actual route length, possible diversions due to unforeseen conditions and extra cable length that may be required at terminations should be considered.

4.2.2 *Soil Conditions* — The knowledge of the soil and environmental conditions helps in selecting type of finish of protective covering of the cable and the route of laying. The knowledge of type of micro-biological organization and termites existing in the soil where the cables are to be stored or installed may also be useful.

---

*Recommended current ratings for cables: Part 1 Paper insulated lead-sheathed cables.

†Recommended current ratings for cables: Part 2 PVC-insulated and PVC-sheathed heavy duty cables.

4.2.2.1 *Nature of soil* — The current carrying capacity of a cable is dependent on thermal resistivity of soil and ground temperatures for directly buried cables (*see* Note). For general applications, the basic values adopted in IS : 3961 (Part 1)-1967* and IS : 3961 (Part 2)-1967† are sufficient and are applicable to the conditions prevailing in most parts of India.

NOTE — Methods of measurement of thermal resistivity of soil are given in ERA Report No. F/T 181.

4.2.2.2 *Chemical action* — The soil may contain such chemicals which are detrimental to the life of the cable. It is, therefore, advisable that the *p*H value and the chemical composition of the soil be determined.

4.2.2.3 *Electrolytic corrosion* — Where the possibility of electrolytic corrosion exists, for example, adjacent to dc traction system, the potential gradient along the pipe-line and the cable sheath should be specified.

4.2.3 *Operating Conditions*

4.2.3.1 *System voltage* — The rated voltage, maximum operating voltage, whether dc or ac, number of phases and frequency. The permissible operating voltages are given in Table 1.

TABLE 1 PERMISSIBLE OPERATING VOLTAGE

Rated Voltage of Cable		Maximum Permissible Continuous 3-Phase System Voltage, U_m	Maximum Permissible Continuous 1-Phase System Voltage		Maximum Permissible dc Voltage
U_0	U		Both Cores Insulated	One Core Earthed	
(1)	(2)	(3)	(4)	(5)	(6)
kV	kV	kV	kV	kV	kV
0·65	1·1	1·21	1·4	0·7	1·8
1·9	3.3	3·63	4·2	2·1	
3·3	3·3	3·63	4·2	4·2	—
3·8	6·6	7·26	8·1	4·0	—
6·6	6·6	7·26	8·1	8·1	—
6·35	11	12·1	14	7	—
11	11	12·1	14	14	—
12·7	22	24·2	28	14	—
19	33	36·3	42	21	—

*Recommended current ratings for cables: Part 1 Paper-insulated lead-sheathed cables.

†Recommended current ratings for cables: Part 2 PVC-insulated and PVC-sheathed heavy duty cables.

4.2.3.2 *Earthing conditions* — In 3-phase systems, it is necessary to know whether the neutral point is effectively earthed, or earthed through resistance, inductance or earthing transformer or if system is totally unearthed. For the purpose of this standard, a system may be considered earthed if:

a) The neutral point is earthed in such a manner that during a line-to-earth fault the highest rms voltage to earth of a sound phase(s) expressed as a percentage of the highest line-to-line voltage, does not exceed 80 percent, irrespective of the fault location, or

b) The neutral point is not earthed but a device is installed which automatically and instantly cuts out any part of the system which becomes accidentally earthed, or

c) In case of ac systems only, the neutral point is earthed through an arc suppression coil with arrangement for isolation within one hour for the non-radial field cables and within 8 hours for radial field cables, of occurrence of the fault provided that the total of such periods in a year does not exceed 125 hours.

4.2.3.3 *Load conditions* — The precise information regarding actual load conditions helps in choosing correct cross-section of conductors for the cable. Broadly speaking, load conditions are as follows:

a) *Normal continuous load* — By normal continuous load, it is meant that the given load current will be flowing continuously through cables. The current ratings given in relevant Indian standard specifications are always continuous current ratings and can be related directly to continuous load currents. However, the current ratings given in these specifications are based on the normal conditions of installation. If the actual conditions are not the same as the normal conditions, the values for the normal current ratings should be multiplied by relevant rating factors given in the same Indian standard specification.

b) *Intermittent load* — If the cable is switched on and off periodically, so that the time between switching 'off' and then 'on' is not sufficient to cool the conductor to the ambient temperature during the rest period, then such load is called intermittent load. A proper cross-section of cable conductors for such load conditions may be decided in consultation with the cable manufacturers.

c) *Short time load* — Under these load conditions, the conductor is allowed to cool down to ambient temperature after the load period. Here again, the conductor cross-section may be decided in consultation with the cable manufacturers.

d) *Cyclic load* — If the load is cyclic, the maximum permissible current may be increased by an amount depending on the shape of the load curve, type of cable, its heat capacity and method of installation.

4.2.3.4 *Permissible voltage drop* — This factor also decides the minimum conductor size, particularly in case of long feeders so as to maintain voltage drop within statutory limits. Guidance about voltage drop, in volts per kilometre per ampere, at the operating temperature of the cable, may be drawn from Tables 2, 3 and 4. This is also an important consideration for cables feeding motors as starting torque of motor depends on square of voltage available at motor terminals.

TABLE 2 ESTIMATED VOLTAGE DROP FOR PAPER INSULATED ALUMINIUM CONDUCTOR, ARMOURED, THREE CORE CABLES

Nominal Cross-Sectional Area of Conductor	Voltage Drop, V/km/A			
	6·35/11 kV & 11/11 kV (Belted-Type)	11/11 kV (H-Type)	12·7/22 kV (H-Type)	19/33 kV (H-Type)
(1)	(2)	(3)	(4)	(5)
mm²				
16	3·92	3·98	—	—
25	2·46	2·51	2·51	—
35	1·79	1·82	1·82	—
50	1·32	1·35	1·35	—
70	0·92	0·94	0·94	0·95
95	0·67	0·69	0·69	0·70
120	0·54	0·55	0·55	0·56
150	0·44	0·46	0·46	0·47
185	0·36	0·37	0·38	0·38
225	0·31	0·32	0·32	0·33
240	0·30	0·31	0·31	0·32
300	0·25	0·26	0·27	0·28
400	0·21	0·22	0·23	0·24

TABLE 3 ESTIMATED VOLTAGE DROP FOR CROSSED-LINKED POLYETHYLENE, ALUMINIUM CONDUCTOR, ARMOURED THREE CORE CABLES

(*Clause* 4.2.3.4)

Nominal Cross-Sectional Area of Conductor	Voltage Drop, V/km/A				
	3.8/6.6 kV	6.6/6.6 & 6.35/11 kV	11/11 kV	12.7/22 kV	19/33 kV
(1)	(2)	(3)	(4)	(5)	(6)
mm²					
16	4.24		—		
25	2.67	2.67	2.67	—	—
35	1.94	1.94	1.94	1.94	—
50	1.44	1.44	1.44	1.44	1.44
70	1.00	1.00	1.01	1.01	1.01
95	0.70	0.74	0.74	0.74	0.74
120	0.56	0.59	0.60	0.60	0.60
150	0.48	0.49	0.49	0.49	0.50
185	0.40	0.40	0.41	0.41	0.42
240	0.30	0.32	0.33	0.33	0.32
300	0.26	0.27	0.28	0.28	0.29
400	0.21	0.23	0.24	0.24	0.25

TABLE 4 ESTIMATED VOLTAGE DROP FOR PVC INSULATED, ALUMINIUM CONDUCTOR, ARMOURED THREE CORE CABLES

(*Clause* 4.2.3.4)

Nominal Cross-Sectional Area of Conductor	Voltage Drop, V/km/A				
	1.1 kV	1.9/3.3 kV	3.8/6.6 kV	6.6/6.6 kV	6.35/11 kV
(1)	(2)	(3)	(4)	(5)	(6)
mm²					
1.5	41.6			—	—
2.5	25.0	—	—	—	—
4	15.7	—		—	—
6	10.4	—	—	—	
10	6.2			—	—
16	4.0	—	—	—	
25	2.5	2.5	2.5	2.5	2.5
35	1.8	1.9	1.82	1.82	1.82
50	1.3	1.35	1.35	1.35	1.35
70	0.94	0.94	0.94	0.94	0.94
95	0.68	0.69	0.69	0.69	0.70
120	0.55	0.55	0.56	0.56	0.56
150	0.46	0.46	0.46	0.46	0.47
185	0.37	0.37	0.38	0.38	0.38
240	0.30	0.30	0.31	0.31	0.31
300	0.26	0.26	0.26	0.26	0.27
400	0.22	0.22	0.22	0.23	0.23
500	0.20	0.20	0.20	0.20	0.21
630	0.18	0.18	0.18	0.18	0.19

4.2.3.5 *Short-circuit data*

a) Maximum asymmetric short-circuit current,

b) Initial rms alternating current (effective value),

c) Sustained short-circuit current (effective value),

d) Earth fault current in earthed neutral system, and

e) Total fault clearance time.

The maximum sustained rms fault current and its duration will depend upon system parameters and protective devices. It is desirable that the same be correlated to short-circuit rating of the cables.

4.2.4 *Installation Condition* — Method of laying, installation details, such as, thermal resistivity, soil temperature, dimensions of trench, number, type, cross-sectional area and the load of all power cables already in trench or duct or likely to be installed, difficulties expected during installation, likely mechanical stress, vibrations, railway or road or river crossing if any, grouping and spacing of cables, are to be considered.

4.2.5 *Economic Considerations* — While technical considerations decide the minimum conductor cross-section, economics governs the optimum size which would give the minimum running costs. For this purpose, the minimum size along with two or three higher sizes are considered, and annual running costs for each size are worked out by calculating loss (in terms of money) and interest/depreciation of the cable cost. The total of these two gives running cost. The size which gives the minimum running cost should be chosen.

4.2.6 Besides this, other factors such as standardization of cable sizes, future expansion, standardization of accessories, etc, should also be considered especially for large distribution systems.

4.2.7 *Data About Cable Joints and Terminations* — The data described under **4.2.7.1** and **4.2.7.2** should be collected.

4.2.7.1 *End terminations*

a) Number of end terminations/sealing ends,

b) Outdoor or indoor type,

c) Pollution level and humidity,

d) Desired type, and

e) Space available.

4.2.7.2 *Cable joints*

a) Type of joints;

b) Soil conditions such as type of soil, sub-soil water level, chances of soil subsidence and vibration; and

c) Type and size of existing cables.

4.2.8 *Drum Lengths and Mass*

a) Required drum lengths in accordance with pre-determined joint positions and other relevant factors, and

b) Restrictions regarding mass and dimensions of cable drums due to transport difficulties. Heavier and larger drums pose considerable problem while loading/unloading, transporting handling and laying.

SECTION 2 GENERAL

5. GUIDELINES FOR CABLE LAYING AND INSTALLATION

5.1 Selection of the Route

5.1.1 The selection of the route should first be decided keeping in view the immediate and ultimate use of the cable as an integrated part of the transmission and distribution system.

5.1.2 For a feeder run, that side of the street which presents the least obstacles and the fewest roadway crossings is naturally chosen, but if a distributor is being laid concurrently with feeders, prospects of future consumers may influence the decision on this point. In such cases, distributors should always be laid nearest to the buildings.

5.1.3 For transporting the cable drums to work site, it is necessary to check the road conditions, whether it has loose soil, is marshy, water-logged, etc, including turns and widths. Special attention should be paid to the load bearing capacity of the bridges and culverts and other obstructions which fall enroute.

5.1.4 If possible, cables should be laid along the footpath rather than the carriage way. Plans for future building projects should be considered. The route should be, as far as possible, away from parallel running gas, water pipes and telephone/telecommunication cables.

5.1.5 Suitable locations for cable joints and end terminations should be selected as required.

5.2 Permissible Gradient of the Route and Permissible Vertical Height — For XLPE and PVC insulated cables up to 11 kV grade and paper insulated cables having non-draining compound, gradients and vertical heights do not pose any problems. However, in case of vertical installations, if cables are to be of self-supporting type, the cable manufacturer may be consulted for providing special strong armour.

5.3 Minimum Permissible Bending Radii — The cable should not be bent to a sharp radius. Minimum recommended bending radii are given in Table 5 (*see* Fig 1). Wherever possible, larger bending radii should be used

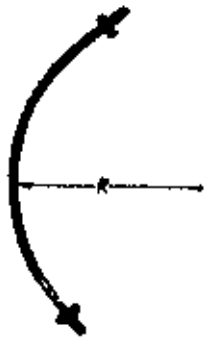

FIG. 1 PERMISSIBLE BENDING RADII

TABLE 5 MINIMUM PERMISSIBLE BENDING RADII FOR CABLES

VOLTAGE RATING	PILC CABLES		PVC and XLPE CABLES	
	Single-Core	Multi-Core	Single-Core	Multi-Core
(1)	(2)	(3)	(4)	(5)
kV				
Up to 1·1	20 *D*	15 *D*	15 *D*	12 *D*
Above 1·1 to 11	20 *D*	15 *D*	15 *D*	15 *D*
Above 11	25 *D*	20 *D*	20 *D*	15 *D*

NOTE — *D* is outer diameter of cable.

5.3.1 At terminations, under onerous site conditions, should the bending radius be required to be reduced from the values given in Table 5, special precautions should be taken so as not to damage the cable.

5.3.2 At joints and terminations bending radius for the individual cores should be above 12 times the diameter over the insulation.

5.4 Maximum Permissible Tensile Strength for Cables

5.4.1 *For Cables Pulled with Stocking*

PVC and XLPE insulated armoured power cables		$P = 9\ D^2$
PVC and XLPE insulated unarmoured power cables		$P = 5\ D^2$
Paper insulated armoured power cables	Belted and H type cables	$P = 3\ D^2$
	HSL cables	$P = 1\ D^2$

where

P = pulling force in Newtons, and

D = outer diameter of cables in millimetres.

5.4.2 *For Cables Pulled by Pulling Eye* — If the cables are pulled by gripping the conductor directly with pulling eye, the maximum permissible tensile stress depends on the material of the conductor and on their cross-section as given below:

For aluminium conductors	30 N/mm²
For copper conductors	50 N/mm²

5.4.2.1 The cable pulling eyes used primarily for paper-insulated cables, should seal off the cable ends so that they are watertight. They are specially made for each type of cable.

Example:

Cable APLSTS 3×95 mm², 11 kV, OD = 50 mm

The maximum pulling force P:

with cable stocking = $3D^2 = 3 \times 50^2$ = 7 500 Newtons

with cable pulling eye = $3 \times 95 \times 30$ = 8 550 Newtons

5.5 Expected Pulling Force When Pulling Cables by Winch — The following values of pulling force are expected:

P = (approximately percentage of cable weight):

In trenches without large bends	15-20 percent
In trenches with 1 or 2 bends of 90° each	20-40 percent
In trenches with 3 bends of 90° each (assuming the use of easy-running support and corner rollers)	50-60 percent
In ducts with bends totalling 360°	Up to 100 percent

6. METHODS OF CABLES LAYING AND INSTALLATION

6.1 The conventional methods of cables laying and installation are:

a) Laying direct in ground (*see* **6.3**),
b) Drawing in ducts (*see* **6.4**),
c) Laying on racks in air (*see* **6.5**),
d) Laying on racks inside a cable tunnel (*see* **6.6**), and
e) Laying along buildings or structures (*see* **6.7**).

6.2 Choice of System

6.2.1 The choice of any of the systems given under **6.1** depends on the actual installation conditions, initial cost of laying, maintenance and repair charges, desired ease in replacement of any cable or adding new cables. The relative merits and demerits of the above systems are summarized in Appendix B.

6.3 Laying Direct in Ground

6.3.1 This method involves digging a trench in the ground and laying cable(s) on a bedding of minimum 75 mm riddled soil or sand at the bottom of the trench, and covering it with additional riddled soil or sand of minimum 75 mm and protecting it by means of tiles, bricks or slabs (*see* Fig. 2).

6.3.2 *Depth* — The desired minimum depth of laying from ground surface to the top of cable is as follows:

High voltage cables, 3·3 kV to 11 kV rating	:	0·9 m
High voltage cables, 22 kV, 33 kV rating	:	1·05 m
Low voltage and control cables	:	0·75 m
Cables at road crossings	:	1·00 m
Cables at railway level crossings (measured from bottom of sleepers to the top of pipe)	:	1·00 m

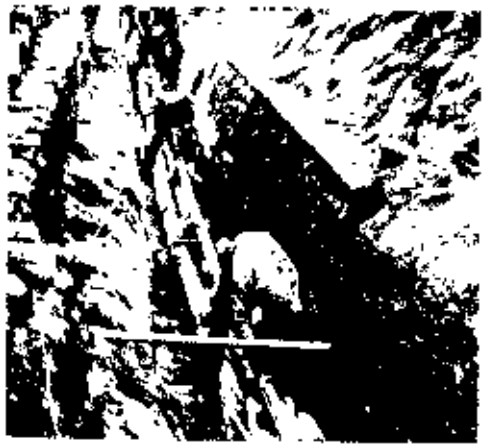

FIG. 2 CABLE BEING LAID IN GROUND

6.3.3 *Clearances* - The desired minimum clearances are as follows:

Power cable to power cable	Clearance not necessary; however, larger the clearance, better would be current carrying capacity
Power cable to control cables :	0·2 m
Power cable to communication cable :	0·3 m
Power cable to gas/water main :	0·3 m

Inductive influence on sensitive control cable on account of nearby power cables should be checked.

6.3.4 *Cables Laid Across Roads, Railway Tracks and Water Pipe Lines*

6.3.4.1 Steel, cast iron, plastics, cement or earthenware ducts, or cable ducting blocks should be used where cables cross roads and railway tracks. Spare ducts for future extensions should be provided. Spare duct runs should be sealed off. Buried ducts or ducting blocks should project into footpath or up to the edge of road, where there is no footpath, to permit smooth entry of cable without undue bending.

6.3.4.2 The duct/pipe joints should be covered by collars to prevent settlement of in between pipes. It may be desirable to leave a pilot wire inside the ducts.

6.3.4.3 The diameter of the cable conduit or pipe or duct should be at least 1·5 times the outer diameter of cable. The ducts/pipes should be mechanically strong to withstand forces due to heavy traffic when they are laid across road/railway tracks.

6.3.4.4 The cable entry and exit should be through bell mouth or padding. A typical bell mouth prepared from lead sheath fitted on to cast iron pipe cable duct is shown in Fig. 3.

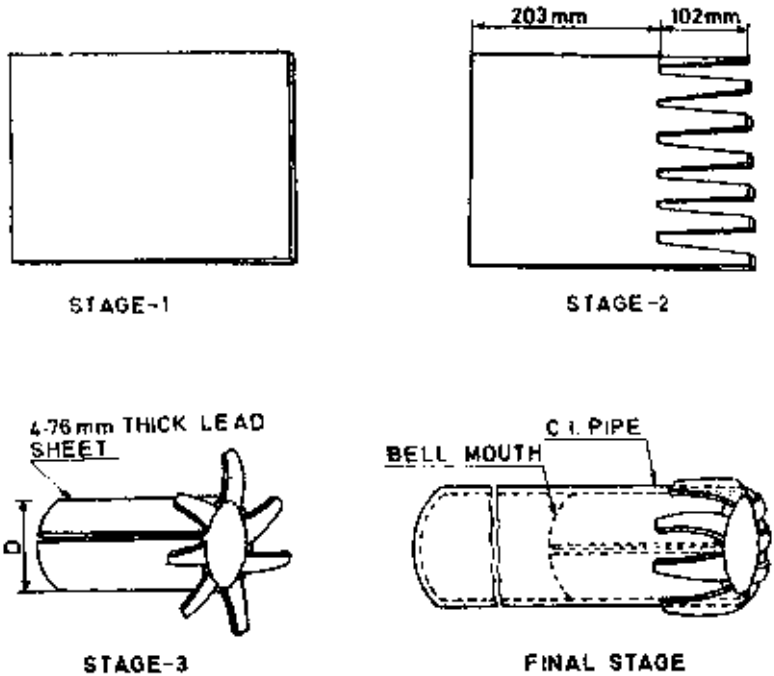

FIG. 3 BELL MOUTH

6.3.4.5 The bending radii of steel or plastics ducts should not be less than 1·5 m.

6.3.4.6 Single-core cables should not be laid individually in steel ducts but instead, all three cables of the same system should be laid in one duct.

6.3.5 *Cable Over Bridges* — On bridges, the cables are generally supported on steel cable hooks or clamped on steel supports at regular intervals. While designing a cable layout on a bridge; expansion of bridge due to changes in atmospheric temperature should be taken into account. On most of the rail-cum-road bridges, the cables are subjected to vibrations. For such conditions, round wire armoured and lead alloy '*B*' sheathed cables are preferred. Cables can be laid on bridges duly suspended from catenary wire at regular intervals. The catenary wire should be of galvanized steel of adequate strength and of stranded construction. The catenary wires in suitable spans, are connected to rigid members of a bridge by means of turnbuckles. The cable is suspended on steel aluminium/leather suspenders: connected to the catenary wire by dropper wires. This type of installation takes care of expansion of bridge and vibration problems.

It is advisable that cables laid in bridges are provided with sunshields, to protect the cables from direct heating by sun's rays.

Some road bridges are provided with built-in cable-ducts and on such bridges the cables may be installed in these ducts.

It is necessary to obtain formal approval of the appropriate authorities (PWD/Railways) of the cable layout arrangement to be adopted on a bridge.

6.3.6 *Cables Below Railway Crossing* — When the cables are laid under railway tracks the cables should be laid in reinforced span concrete or cast iron or steel pipes at such depths as may be specified by the railway authorities but not less than 1 m measured from the bottom of sleepers to the top of the pipe. In the case of single-core cables the cast iron or steel pipes should be large enough to contain all the three single core cables forming the circuit in the same pipe.

6.4 Drawing the Cables into Ducts Pipes

6.4.1 When drawing the cables into ducts, lack of space in the drawing pits usually restricts the distance from the drawn duct mouth and it is essential that the direction of curvature of the cables is not reversed as it enters the duct. If the duct is on the same side of drawing pit, as the duct mouth is shown in Fig. 4, this condition is fulfilled.

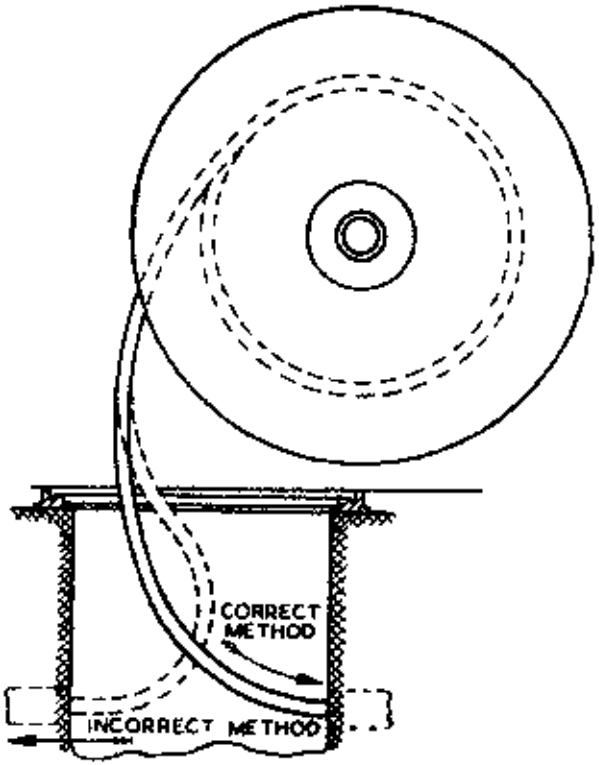

FIG. 4 METHOD OF PULLING CABLES TO DUCTS

6.4.2 On long run ducts, it is desirable to apply lubrication to the lead or serving/outer sheath as it enters the duct. Petroleum jelly or graphite powder or a combination of both is effective for this purpose and through lubrication will reduce the pulling tension by about 40 percent. Alternatively, graphite finish over the serving/outer sheath of the cables would equally serve the purpose. The ducts having bell mouth ends should be laid at all man-hole positions in the cable unless otherwise protected to avoid sharp edges.

6.4.3 While fixing the cables in ducts, stockings or pulling eyes may be used. Stockings are slipped over the cable surface while the pulling eyes are connected to the conductors. Pulling is carried out with manual labour by means of winches or other mechanical means when the cable to be pulled is fairly long.

6.4.4 *Method of Pulling Through Ducts* — Cane rods of 2 or 3 m length each fitted with brass screwed caps with screwed portion on one side and fitting socket on the other side are passed into the duct one by one, every time fixing the last end of the previous cane rod to the starting end of the second rod thus completing the full length of the duct. A strong rope or flexible steel wire rope is attached to the end of the last cane rod and the whole thing is pulled from the other end of the duct. In this way the pulling rope or wire may be passed through the duct, other end of the rope or wire is then fastened to the pulling grips or pulling eyes, before actually commencing the pulling operation.

6.4.4.1 In the case of pulling eyes, the pulling tension directly comes on the conductor and depends on the area of cross-section of the conductor, the number of cores and the conductor material.

6.5 Laying on Racks in Air

6.5.1 Inside buildings, industrial plants, generating stations, substations and tunnels, cables are generally installed on racks fixed to the walls or supported from ceiling. Racks may be ladder or perforated type and may be either fabricated at the site or pre-fabricated.

Considerable economy can be achieved using standard factory made racks. The necessary size of the racks and associated structure has to be worked out taking into consideration the cable grouping and permissible bending radii (*see* Fig. 5).

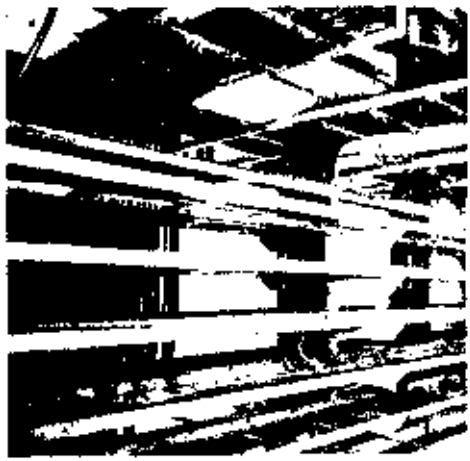

FIG. 5 CABLE INSTALLED ON RACKS

6.5.2 The space provided for cable racks has to be sufficient. They are generally fixed to the wall or supported by free standing columns or structures enabling easy installation or replacement of cables.

6.5.3 The vertical distance between the two racks should be minimum 0·3 m and the clearance between the first cable and the wall (if racks are mounted on wall) should be 25 mm. The width of the rack should not exceed 0·75 m in order to facilitate installation of cables.

6.5.4 The cables are laid directly on the trays with or without spacers. Each tray should preferably contain only one layer of cables. Stacking cables one above other in 2 or 3 layers on one rack or tray reduces their current carrying capacity to a very great extent. More than one tier trays are permissible if the cables present cannot be accommodated in a single tray.

6.5.5 Ungalvanized steel work of cable racking/trays should be painted with a coat of primer and thereafter finished with suitable anti-corrosive paint.

6.5.6 Only single-core cables laid on horizontal racks need be clamped at suitable intervals. Multi-core cables need not be clamped.

6.5.7 The distance between the vertical clamps should not be more than 2 m.

6.5.8 *Laying of Cables on J Hooks Mounted on Wall* — Another method of mounting cables along walls is with the provision of 'J' hooks which are fixed on the wall for supporting the cable. Distance between these supports depends on size and weight of the cable. Where more than one cable has to be supported either separate 'J' hooks may be used or a strip with multi-tier projections in the form of 'J' can be provided. When there is a change in direction of the wall, 'J' hook should be provided near the turning on both sides.

6.5.9 *Cables Suspended from Catenary Wire* — In certain section it may be necessary to install a cable across an area, suspended from a catenary wire by means of steel/aluminium/leather suspenders. The suspenders are hung from catenary wire by means of GI dropper wires. The catenary wires should be of galvanized steel of adequate strength and of stranded construction. The two ends of the catenary wires should be connected to rigid supports by means of GI turnbuckle. The rigid supports may be of steel poles/structure of adequate strength. It is advisable that cable suspended from a catenary wire is provided with sun shield to protect the same from direct heating by sun's rays.

6.6 Laying Cables on Racks Inside a Tunnel

6.6.1 This system is essentially same as described in **6.5** (*see* Fig. 6). However, where the cables are in unventilated tunnel, the heat generated in the cables is dissipated only through the walls of the tunnel. Consequently there is an increase in the temperature of the cables installed in the tunnel and accordingly a proper derating has to be applied to the current carrying capacity of the cables installed in the tunnel.

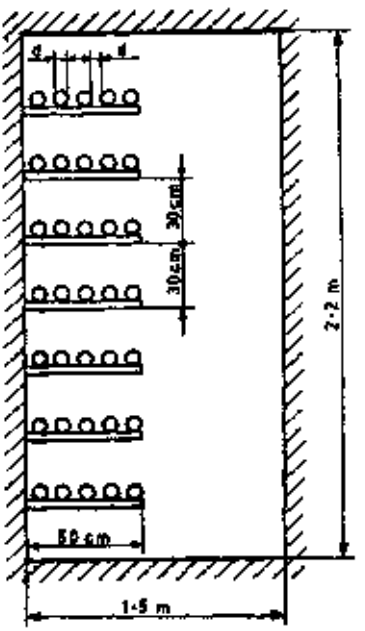

FIG. 6 CABLES INSTALLED ON RACKS INSIDE CABLE CANAL

The heating of the air depends solely on the magnitude of the power loss of all the cables. The increase in air temperature is given by the following formula:

$$T = \frac{W}{3P}$$

where

T = increase in temperature over ambient air temperature, °C;
W = total heat loss per metre length of all the cables in watts; and
P = perimeter of tunnel cross-section in metres.

NOTE — When calculating perimeter of the tunnel cross-section, only those surfaces which permit dissipation of heat should be taken into account.

6.6.2 In the case of 'Passable' cable tunnel, the head room should not be less than 2 m and width sufficient to leave a free passage of at least 600 to 800 mm either from one side or in the middle. Due consideration should be given for adequate ventilation, lighting and drainage.

6.6.3 Proper barriers should be provided to isolate various sections of long tunnels so as to contain flooding and fire.

6.7 Laying Along Buildings or Structures — Cables can be routed inside the building along with structural elements or with trenches under floor ducts or tunnels. The route of proposed cable should be such that intersection with other cables will be minimum The route should not subject these cables to any vibrations, damage due to heat or other mechanical causes, otherwise adequate precautions should be taken.

7. PACKING, TRANSPORT AND STORAGE

7.1 Cables are generally received wound on wooden drums, both the ends of the cable being easily accessible for inspection and testing. However, short lengths may be transported without drums.

7.2 In case of paper-insulated lead-sheathed cables, both the ends of cables should be protected from moisture by means of plumbed lead caps. In case of PVC and XLPE cables sealed plastic caps should be used.

7.3 The cable drums or coils must not be dropped or thrown from railway wagons or trucks during unloading operations. A ramp or crane may be used for unloading cable drums. If neither of these is available, a temporary ramp with inclination 1 : 3 to 1 : 4 approximately should be constructed. The cable drum should then be rolled over the ramp by means of ropes and winches. Additionally a sand bed at the foot of the ramp may be made to brake the rolling of cable drum.

7.4 The arrows painted on the flange of the drum indicate the direction in which the drum should be rolled. The cable will unwind and become loose if the drum is rolled in the opposite direction (Fig. 7).

7.5 The site chosen for storage of cable drums should be well-drained and should preferably have a concrete surface/firm surface which will not cause the drums to sink and thus lead to flange rot and extreme difficulty in moving the drums.

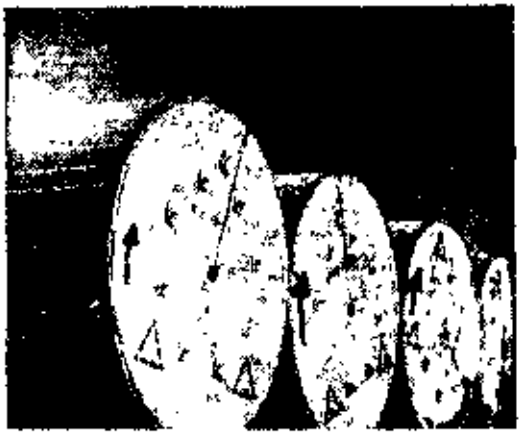

FIG. 7 ARROW ON FLANGE OF CABLE DRUM

7.6 All drums should be stored in such a manner as to leave sufficient space between them for air circulation. It is desirable for the drums to stand on battens placed directly under the flanges. During storage, the drum should be rolled to an angle of 90° once every three months.

7.7 In no case should the drums be stored 'on the flat'; that is, with flange horizontal.

7.8 Overhead covering is not essential unless the storage is for a very long period. The cable should, however, be protected from direct rays of the sun by leaving the battens on or by providing some form of sun shielding.

7.9 When for any reason, it is necessary to rewind a cable on to another drum, the barrel of the drum should have a diameter not less than that of the original drum.

SECTION 3 LAYING AND INSTALLATION

8. GENERAL

8.1 After the planking has been removed, the cable should be examined for exterior damage, if any. To avoid damage to the protective covering and the insulation the cable must not be pulled across hard and sharp objects and must not be bent in an inadmissible way.

8.2 The cable should always be pulled off the top of the drum. In doing so, the drum should be placed in such a way that the painted arrow points to the opposite direction of the pulling. The drum is jacked up with a drum axle to such a height that the plank needed for braking cannot jam; heavy drums should be jacked up with hydraulic drum pedestals (*see* Fig. 8).

FIG. 8 CABLE BEING PULLED FROM DRUM

8.3 Suitable provisions should be made to brake the drum, in order that during a sudden stop further rolling and consequent buckling of the cable is avoided. The kinks (nooses) are particularly dangerous and should be avoided at all costs. A simple plank can serve as drum brake. When pulling, the cable drum is turned by hand in order to avoid excessive tensional stress, which may damage the cables, particularly smaller unarmoured cables.

8.4 With temperatures below 3°C, the cables should be warmed before the laying out, since otherwise the bending would damage the insulation and protective coverings of cables. The cable laying must be carried out swiftly, so that the cable does not cool down too much.

Warming of cables may be achieved by storing the cables for adequately longer period (not less than 24 hours) in a heated building or in a tent with hot air heaters. To facilitate laying, however, the cables should be heated to about 10°C.

8.5 The leading end of the cable is untied from the cable drum and a cable stocking placed over it and secured firmly. A rope is attached to the cable stocking pulling eye. No pull should be exerted on the end of the cable.

8.6 Identification strips/tags of metal or plastics should be attached to the cables, particularly if several are laid in parallel, 8 to 10 m apart. Identification tags should also be attached at every entry point into the buildings and at the cable end termination.

8.7 A bedding of riddled earth or river sand should be provided and protective cable warning covers should be used. Instruction to back fill the trench should not be given until the entire length is protected by cable cover and checked.

8.8 Special Notes for Single-Core Cables

8.8.1 The spacing between three cables laid in one plane should be not less than the cable diameter. When the cables are arranged in a duct or on a rack in this way, each one should be secured either to be base or to the others by non magnetic, non-corrosive clamps every 0·5 to 0·8 m.

8.8.2 When the cable run is several kilometres long, the cables should be transposed at one-third and at two-thirds of the total lengths.

8.8.3 Cables can also be laid in trefoil arrangement in ducts or on racks which improves current distribution and reduces sheath losses. Non-magnetic clamps may not be essential in this case and it suffices to bind the cable with steel, copper, aluminium or plastics tapes every 0·5 to 0·6 m.

8.8.4 The cables do not have to be bound/clamped when laid in ground. Single-core cables should not be installed individually in protective steel ducts; instead, all three should be laid together in one single duct.

8.8.5 If several single-core cables are laid per phase, these should be arranged as follows to ensure balanced current distribution:

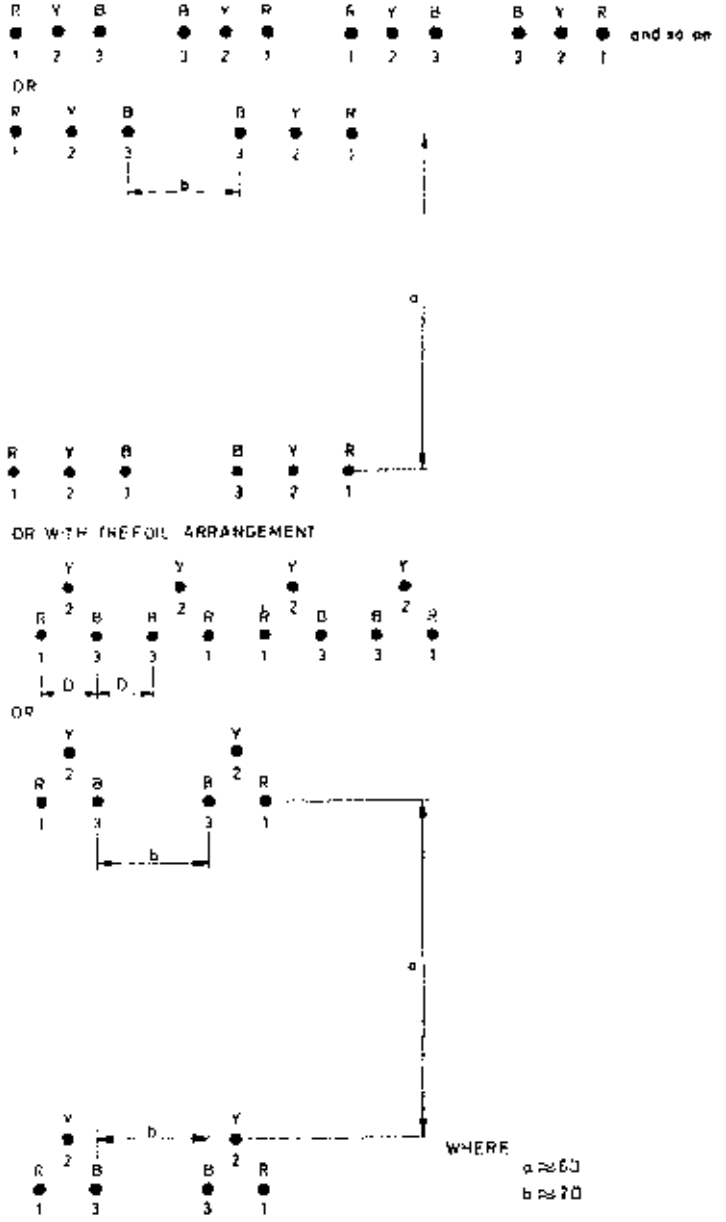
and so on
OR
OR WITH TREFOIL ARRANGEMENT
OR
WHERE
a ≥ 60
b ≥ 70

9. TRENCHING

9.1 Methods of Trenching — The known methods of trenching are:

a) Manual excavation,

b) Excavating with mechanical force,

c) Thrust bore, and

d) Trench ploughing.

Of these, only the first two are possible in cities and towns where there is a risk of damage to other properties existing underground. However, the final choice would depend upon the type of ground to be excavated.

9.2 Tunnelling or Heading

9.2.1 A tunnel or heading under a roadway is, sometimes, adopted to avoid opening up the road surface. This is often necessary when the number of other pipes and services under the roadway, or uncertainty about their location and depth, makes thrust boring too risky.

9.2.2 If several cables have to be laid under the roadway, or if the drawing system is being used, tunnelling may be the only method available to cross a busy thoroughfare.

9.2.3 When the tunnel has been excavated, the cables could be laid direct but this would mean further excavation if a section had to be replaced at some future date. It is usual, therefore, to lay pipes or stoneware conduits and to allow several spare ways for future developments.

9.2.4 Back filling of the excavated soil should be carefully carried out, the soil should be well rammed-in to prevent the road surface cracking due to settlement of loose fill. If a large number of pipes are laid across the road, a manhole should be built on either side to terminate the pipes.

9.2.5 As there is a danger of serious accidents because of the road surface cracking or caving-in due to heavy vehicular traffic passing over the tunnelled portion of the road, all tunnelling operations should preferably be undertaken only in the night when the density of vehicular traffic is very low. To avoid accidental damage to other installations in the path of the tunnel during the tunnelling operation, the tunnel should be well illuminated, preferably by powerful torch lights when men are at work.

10. LAYING OF CABLES

10.1 Paying-out from a Trailer — Cables may be paid-out directly from a drum mounted on trailer, if there are no obstacles in a trench or in its vicinity. Trailer should move very slowly and the cable drum should be rotated by hand and braked if necessary in order to prevent excessive tensile stresses or kinking of the cables (*see* Fig. 9)

FIG. 9 CABLE BEING PULLED DIRECTLY FROM SLOW MOVING CABLE WAGON

10.2 Laying by Hand

10.2.1 A drum is mounted with a strong spindle on cable jack. The drum is jacked high enough to fit in braking plank. Weak shaft should not be used; otherwise drum would revolve unevenly. The drum should never be kept flat on its side on the ground and the cable taken away from the same. This invariably leads to kinking and bird-caging.

10.2.2 The pay-in rollers, corner rollers (*see* Fig. 10) and properly aligned and smooth running cable rollers should be placed every 3 to 4 m in the cable trench. At least three solid plates for guiding the cable around the bend should be used maintaining minimum bending radius.

10.2.3 The cable drum is mounted on the spindle with the help of jacks on the two sides. The drum is slowly raised equally from both ends by using both the jacks. The cable drum is mounted and is kept at proper position in such a way that the cable is paid out from the top of the drum

10A For straight run

10B For corner

FIG. 10 CABLE ROLLERS

when turned against the direction of arrow marked ROLL THIS WAY. Cable rollers are placed at 3 to 4 metre intervals in the cleaned and bedded trench. Where the trench is deep, it is desirable to provide 2 or 3 long rollers at different heights so as to form a ramp for the cable from the cable drum into the cable trench. A cable grip is provided at the end of the cable and rope connected to the cable grip is passed down the trench to pull the cable. The cable grip is made of wires woven in the form of a basket. It is slipped over the end of the cable and is so designed that it tightens the grip on the cable as the pull increases. Men may also directly grip the cable, positioning themselves near the cable rollers and pull after a sufficient length of about 50 m has been pulled.

The gangman (Mucadam) should stand in a commanding position and make evenly timed calls. This enables the men positioned at each roller to pull the cable evenly, simultaneously and without jerks. The number of men required for pulling largely depends on the size and weight of cable being laid. The men at rollers should also apply graphite grease in the course of pulling, as required. When pulling round a bend, corner rollers should be used so as to minimize abrasion.

10.2.4 When laying the cable by the '*Heave ho*' method, the following procedure should be observed:

NOTE — For heavy cables the *Heave ho* method of laying should be discouraged as far as possible since it tends to leave built-in stresses in the cable.

10.2.4.1 Half of the gang should be positioned along the section, starting from the head. The other half of the gang must hold on to the rope as closely as possible.

10.2.4.2 All the men at the drum, including the brakemen, who are no longer required now, draw off sufficient cable (1 to 2 m) as required each time for the succeeding '*Heave ho*' order.

10.2.4.3 The men no longer draw the cable by the belts or cords, instead they all face the drum and look along the cable which they grasp with both hands. When the order '*Heave ho*' is given, they grip the cable and at the word '*ho*' they tug it vigorously.

10.2.4.4 It is very important that the orders be given properly to ensure that all the men grip and pull the cable simultaneously. The order should not be given from the head or tail of the section, since sound takes a second to travel a length of only 300 m. If the gang reacts even only ½ second too late to the '*ho*' order, the cable will not budge. The order should, therefore, be given from the centre of the section. Where the distance is greater, 2 or 3 deputy foremen should be stationed along the section who then follow the orders given by the foremen waving the flag. Raising the flag means '*Heave*' and lowering it means '*ho*'. Another possibility for synchronizing orders is to use 2 to 3 hand held loud-speakers distributed along the section.

10.2.4.5 If there is not sufficient labour to lay long lengths in one stretch, the cable drums should be placed in the centre of the section and the cable paid out in the required lengths from the top of the drum in the direction '*A*' (*see* Fig. 11). The drum should be rotated further and vertical loops 3 to 4 m long should be pulled off in the direction '*B*'. The cable should be lifted off over the drum sidewall towards the trench and in doing so further cable from the bottom of the drum should be pulled off. The cable loops must be distributed over a cable length of 4 to 6 m. The cable is then slid off the bottom of the drum and laid immediately in the trench.

10.2.4.6 If obstacles in the trench prevent the second half of the cable from being laid from above, the cable should be laid in a figure of eight from the drum on the side from which it was first pulled off. It should be ensured that the cable is pulled off from the figure of eight only from the side in which it was first looped (*see* Fig. 12).

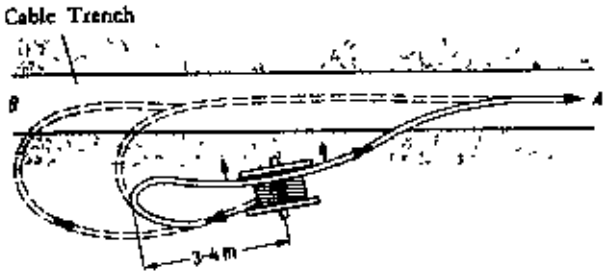

FIG. 11 PULLING OFF THE CABLE IN A LOOP

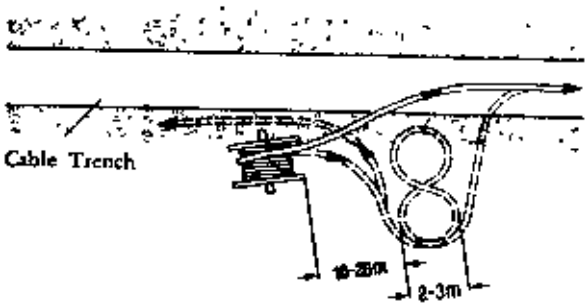

FIG. 12 PULLING OFF A CABLE IN A FIGURE OF EIGHT

10.3 Pulling by Winches

10.3.1 Pulling the cable with a manually operated or engine-driven winch presupposes that the cable can withstand the tensile stresses necessary for this purpose without sustaining damage (*see* **5.4**).

10.3.2 To guide the pulling ropes and the cable, very sturdy guide and corner rollers should be fitted in the cable trench or duct to withstand the considerably greater lateral forces developed compared to those occurring when laying cables by hand.

10.3.3 If a winch is available, it should preferably be used for pulling armoured cables which have a factory-made eye, for example, when pulling the cable through ducts to eliminate any risk of the maximum tensile stresses being exceeded.

10.3.4 The pulling rope should be secured to the eye by a shackle. The armoured/unarmoured cables should be pulled through with a cable stocking or pulling eye.

10.3.5 The tensile forces should be continuously checked by means of a pulling rope meter or dynamometer while pulling the cable. The duct should be cleaned before pulling the cable through it. Long steel or plastics duct sections should be checked with a gauge and coated on the inside with lubricant (for plastics and concrete ducts, boiled-down soap with a low alkali content; for steel ducts, grease; and for PVC cables graphite power can be used as a lubricant).

10.4 Laying by Motor Driven Rollers (*see* Fig. 13)

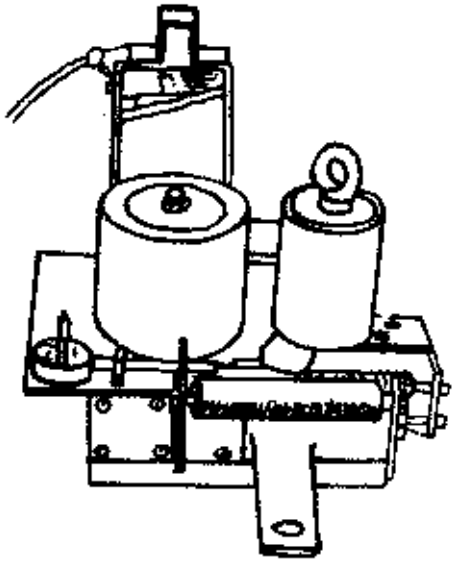

FIG. 13 MOTOR DRIVEN ROLLER

10.4.1 The motor driven rollers enable power cables of any desired length to be laid in open trenches or passable cable trench. They are not recommended for unarmoured cables. They are particularly economical for laying several long lengths of cables in parallel.

10.4.2 Along with usual support and corner roller required for cable laying, motor driven rollers should be set up about 15 to 30 m apart depending on the route and weight of the cable. The cable is pulled between driving roller and a spring loaded counter roller at a speed of approximately 7 m/min.

10.4.3 The leading end of the cable should first be pulled manually or by winch for 10 to 15 m and then passed through motor driven rollers.

All the motor driven rollers are connected to the main switch box and are switched on and off simultaneously.

10.4.4 This cable laying method requires a crew of minimum 3 to 4 trained persons who are then able to lay heaviest cables and up to lengths of 600 to 700 m with the help of 8 to 10 other men. Walkie-talkie sets are necessary to permit the personnel at the drum, main switch and cable leading end to communicate among themselves.

11. REINSTATEMENT

11.1 After laying the cables, it should be checked again to see that the all cable ends are undamaged and sealed. If trench is partially filled with water, cable ends should be kept clear off water as far as possible. If cable has to be cut, both the cable ends should be resealed immediately. Lead cap for paper cable and plastic cap for PVC cable should be used. As a temporary measure, ends can be sealed by inserting them in an empty tin which is filled with hot bitumen based compound.

11.2 The cable ends should overlap at the joint box point by at least half the length of latter. The ends may be looped to provide extra lengths in case of extruded dielectric cables. Each cable length should be aligned immediately after it is laid starting from one end. To enable the cable to be laid on the inner or outer side of the trench, a certain amount of slack is provided all long the cable by raising each one to about the top edge of the trench every 20 to 30 m from the beginning. When aligning the cable, it should be ensured that there is no external damage.

11.3 If the joints are not to be made immediately after laying the cable, the cable ends should be covered. The position of the cable joint should be marked with markers.

11.4 The trench at the duct mouth at road or railway crossing should be deepened to prevent the stone or the gravel from being drawn into duct and clogging it.

11.5 Before the trench is filled in, all joints and cable positions should be carefully plotted by draughtsman. The requisite protective covering should then be provided, the excavated soil replaced after removing large stones, and well rammed in successive layers of not more than 0·3 m in depth. Where necessary, the trenches should be watered to improve consolidation. It is advisable to leave a crown of earth not less than 50 mm in the centre and tapering towards the sides of the trench to allow for settlement.

11.6 The temporary reinstatements of roadways should be inspected at regular intervals particularly during the rainy weather, and settlement should be made good by further filling, if required. Such temporary reinstatement should then be left till such time that the soil thoroughly settles down.

11.7 In the case of trenches and headings close to bridge abutments, the cables should be laid in a pipe over which back-filling with concrete is recommended.

11.8 After the subsidence has ceased, the trench may be permanently reinstated and the surface restored to its original conditions. Where the surface is of special material, such as asphalt or tarred maccadum, it is more satisfactory if the reinstatement is done by the local authorities themselves.

12. JOINTING OF CABLES

12.1 General

12.1.1 The emphasis should be laid on quality and selection of proper cable accessories, proper jointing techniques and skill and workmanship of the working personnel. The quality of joint should be such that it does not add any resistance to the circuit. The materials and techniques employed should give adequate mechanical and electrical protection to the joints under all service conditions. The joint should further be resistant to corrosion and other chemical effects.

12.1.2 *Basic Types of Joint* — The basic types of cable joints are described under **12.1.2.1** to **12.1.2.3**.

12.1.2.1 *Straight through joint* — This joint is used to connect two cables lengths together (*see* **12.3**).

12.1.2.2 *Tee/branch joint* — This is normally used for jointing a service cable to the main distribution cable in city distribution network (*see* **12.4**).

12.1.2.3 *Termination or sealing end* — This is generally used to connect a cable to switchgear terminal in switchboards and distribution pillars, transformers boxes, motor terminal boxes and to overhead lines (*see* **12.5**).

12.1.3 *Types of Cable Jointing Accessories* — The basic types of cable jointing accessories available in the country, at present, are:

a) Joint sleeves with insulating and bitumen based filling compound suitable for jointing cables of voltages up to and including 33 kV (*see* **12.1.4**), and

b) Cast resin based cable accessories suitable for jointing cables of voltages up to and including 11 kV (*see* **12.1.5**).

NOTE — Other accessories; such as heat shrinkable tubes, taped joints and slip-on (pre-moulded) joints are also in use.

12.1.4 *Sleeve Type Joint* — This joint comprises:

a) Dressing of cable ends and conductor joints,

b) Replacing factory made insulation by manual wrapping of tapes or application of pre-formed insulating sleeves,

c) Plumbing metallic sleeve or wiping gland to the lead sheath of the cable to prevent moisture from entering the joint,

d) Filling the metallic sleeve with molten bitumen compound or insulating compound, and

e) Fixing a cast iron or any other protective shell around the joint filling the same once again with molten bitumen compound.

12.1.5 *Cast Resin Joint* — It comprises:

a) Dressing of cable ends and conductor joints;

b) Wiping dry — The core insulation should be wiped dry and all parts, which are to be embedded in the casting resin should be roughened and cleared with relevant degreasing agents;

c) Fixing two halves of mould around the cable joints or ends and sticking them together and sealing to form a leak proof cast mould;

d) Pouring pre-mixed cast resin and hardner into the mould;

e) Allowing sufficient time for setting casting resin; and

f) Removing plastics mould. In case of buried joint, the plastics mould may be left intact.

12.2 General Installation Guidelines

12.2.0 This code does not intend to deal with the complicated work of jointing of cables in much detail, as in all cases it would be best to follow strictly the instructions furnished by the suppliers of cable and joint boxes. However, the recommendations are given for general guidance.

12.2.1 Jointing and termination work should be commenced as soon as possible. For PILC cables it is always advisable to protect the factory plumbed cap by laying the end in solid bitumen until such time as the jointing is commenced.

12.2.2 *Joint Position* — During the preliminary stages of laying the cable, consideration should be given to proper location of the joint position so that when the cable is actually laid the joints are made in the most suitable places. There should be sufficient overlap of cables to allow for the removal of cable ends which may have been damaged (*see* Fig. 14). This point is extremely important as otherwise it may result in a short piece of the cable having to be included. The joint should not be near pipe end or at the bend.

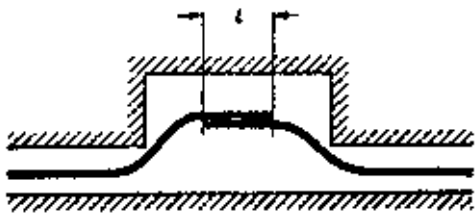

FIG. 14 CABLE JOINT PIT AND OVERLAPPING OF CABLE ENDS

12.2.3 *Joint Pits* — Whenever practicable, joint pit should be of sufficient dimensions so as to allow jointers to work with as much freedom of movement and comfort as possible. For this purpose, the depth of the pit should be at least 0·3 m below the cables to be jointed. The sides of the pit should be draped with small tarpaulin sheets to prevent loose earth from falling on the joint during the course of making. If the ground has been made up by tipping, or if running sand is met with, the pit should be well shored up with timber so as to prevent collapse. The floor of the joint pit should be well consolidated. The two lengths of cable meeting at a joint are laid with an overlap of at least half the length of joint box when pulling in. This enables the jointer to adjust the position of his joint slightly to allow for any obstructions that may be encountered (*see* Fig. 15).

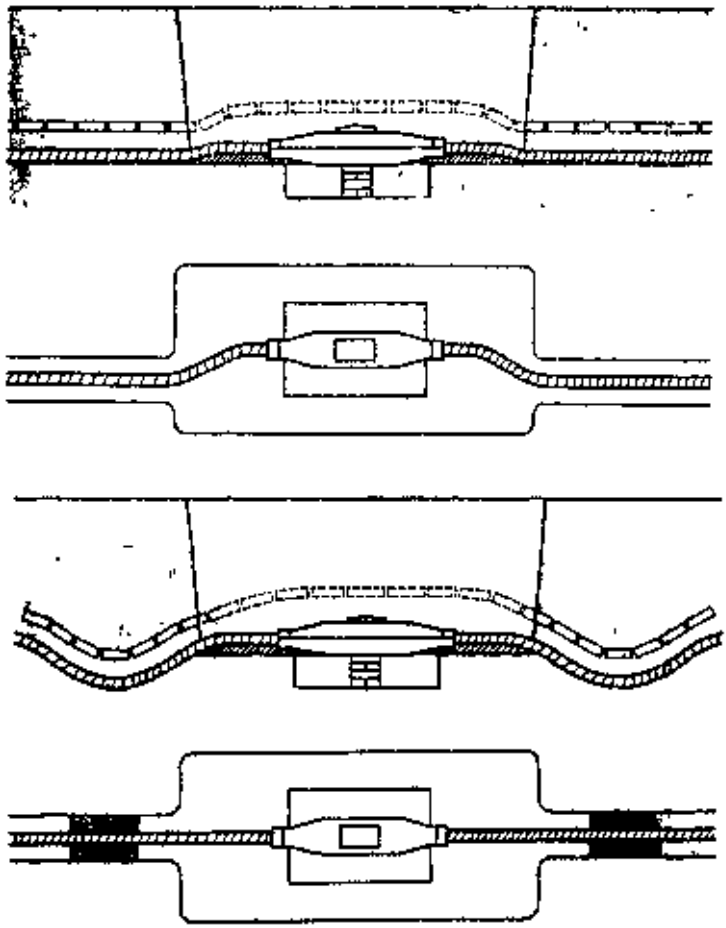

FIG. 15 CABLE JOINT PIT TWO METHODS TO ENSURE EXTRA CABLE LENGTH

12.2.4 When two or more cables are laid together, the joints are arranged to be staggered so as to reduce the excess width of trench and also to isolate the joints from each other and reduce the possibility of one joint failure affecting the other joints.

12.2.5 *Sump Holes* — When jointing cable in water-logged ground or under monsoon conditions, a sump hole should be excavated at one end of the joint hole in such a position so that the accumulating water can

be pumped or baled out without causing interference to the jointing operation.

12.2.6 *Tents* — As far as possible a tent should be used where jointing work is being carried out in the open.

12.2.7 In case of paper insulated cable, the cable seals should be examined to ascertain that they are intact and also that the cable ends are not damaged. If the seals are found broken or the lead sheath punctured, the cable ends should not be jointed until after due examination and testing by the engineer-in-charge of the work.

12.2.8 *Testing Paper Insulation for the Presence of Moisture* — Before jointing a paper insulated cable (for PVC cables this step is not required), the paper insulation should be tested for the presence of moisture by immersion in hot compound or paraffin wax at a temperature between 120°C and 140°C. The presence of moisture is indicated by the formation of bubbles when a piece of the paper is immersed in hot compound. Only a single strip of paper gripped by a pair of tweezers should be used for the test since if several thicknesses of a paper are immersed, the escape of occluded air between the layers may be mistaken for the presence of moisture. Particular attention should be paid to the paper next to the sheath and to that next to the conductor, as it is in these positions that moisture is most likely to be found. The samples of paper should be handled as little as possible to avoid contamination particularly by perspiration.

12.2.9 *Measurement of Insulation Resistance* — Before jointing is commenced, it is advisable that the insulation resistance of both sections of the cable to be jointed be checked by insulation resistance testing instruments like megger.

12.2.10 *Precaution to be Taken on Live Cables in Service*

12.2.10.1 When a cable which is in service is cut for making a joint, normally it is first isolated, discharged, tested and earthed, before proceeding further, although work on live conductors is permissible under certain conditions. The test lamp is one of the apparatus used to determine whether the cable is 'alive' or 'dead'. The jointer should wear rubber boots or gloves or stand on a rubber mat. When rubber mats are used in wet holes, pieces of board should be placed under the mat and water should not be allowed to creep over the edges of the mat.

12.2.10.2 The armouring should be removed first exposing the lead sheath in case of paper insulated cables; next a temporary bond should be connected across the joint sleeve position and lead sheath removed.

The belt insulation, or inner sheath as the case may be, is then removed exposing the cores. The amount of armouring and length of lead sheath, belt papers or inner sheath to be removed will depend on the size and type of joint.

12.2.10.3 Before cutting the cable prior to making a straight joint, the most convenient core to be cut (the neutral should always be cut last) should be selected, and separated from the others by means of a wooden wedge. A small piece of rubber insertion should then be placed between the core to be cut and the remaining cores and cut through the selected core. The cut ends should be separated and tested to ascertain if either or both are live or dead. Irrespective of being live or dead, both ends should be taped as a measure of safety. The same procedure should be followed with the remaining cores. It is advisable to step the positions of the cuts, so that it is impossible for the hacksaw, knife or any other tools which may be in use to cause a short circuit by coming into contact with two or more of the cut ends simultaneously.

12.2.10.4 Before making conductor joints, the lead sheath and armour should be wrapped with insulating material — an old bicycle inner tube is useful for this purpose. This precaution will prevent a 'short' to earth if a tool slips between the live conductor and the sheath or armour.

12.2.10.5 In the case of baring of the conductors for 'tee' and 'service' joints where conductors are not cut, the jointer should be instructed to remove sufficient armouring and lead sheathing for making a joint in the most suitable position. The cores of the cable to be tee-jointed should be spread and suitable tapping positions selected on the main cable. The most convenient core to be teed should be selected and separated from others by means of a wooden wedge (as far as possible, the neutral should be selected first). A rubber insulation should be inserted between this core and the rest and prepare the core for tee-jointing. The paper insulation of the main cable core should be cut for a suitable length and the jointing work completed. Rubber insertion between this core and the rest should not be removed till this exposed core is completely taped. This process should be repeated for other cores taking care that only one core is handled at a time.

12.2.11 All jointing accessories and materials such as solders, plumbing metal, lead sleeves, ferrules and bitumen compound should be in accordance with the relevant Indian Standards, wherever such standards exist.

12.3 Straight Through Joints

12.3.1 *For PILC Cables*

12.3.1.1 For paper insulated lead sheathed cables straight through joints are made either by using sleeve joints or cast resin based kits, up to voltage grade 11 kV. For 22 kV compound and 33 kV grade, filled copper or brass sleeves along with cast iron, RCC or fibre glass protection boxes are used (*see* Fig. 16).

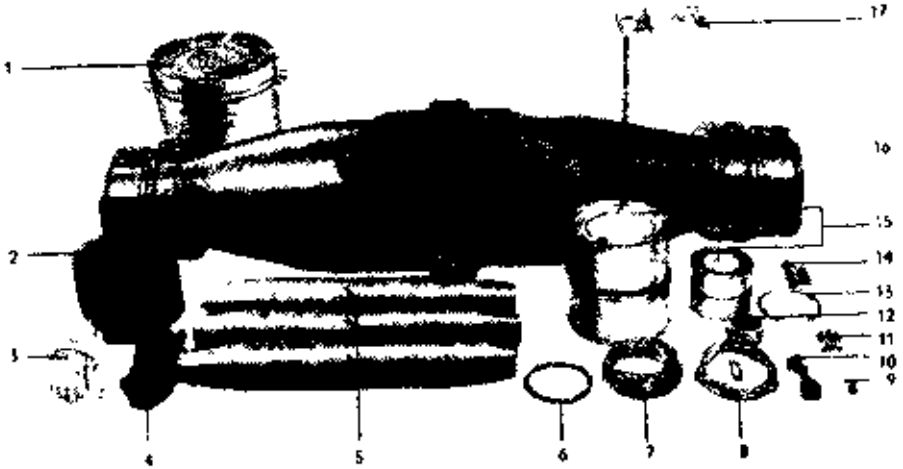

1. Bitumen compound
2. Impregnated paper
3. Asbestos cord
4. Sealing cord
5. Lead inner sleeves
6. Tinned iron wire 1 mm dia
7. Tinned copper wire 2 mm dia
8. Earthing conductor
9. Thread
10. Cord
11. Soldering sleeves
12. Insulating tape
13. Tinned copper wire 1 mm dia
14. Lead foil & carbon paper
15. Paper tape
16. CI box
17. Insulating compound

FIG. 16 TYPICAL CI STRAIGHT JOINT BOX WITH THREE LEAD SLEEVES FOR 22 kV HSL TYPE CABLES

12.3.1.2 Typical drawings for straight through joints with all essential components are shown in Fig. 17, 18, 19 and 20.

12.3.1.3 The cast iron protection boxes used up to 11 kV should conform to relevant Indian Standard and moulds used for 11 kV joints in cast resin joints should conform to relevant Indian standard. Since 22 kV and 33 kV cast iron boxes and moulds for HT joints in cast resin system are not yet standardized, cable manufacturers or suppliers may be consulted for their selection (*see* Fig. 21).

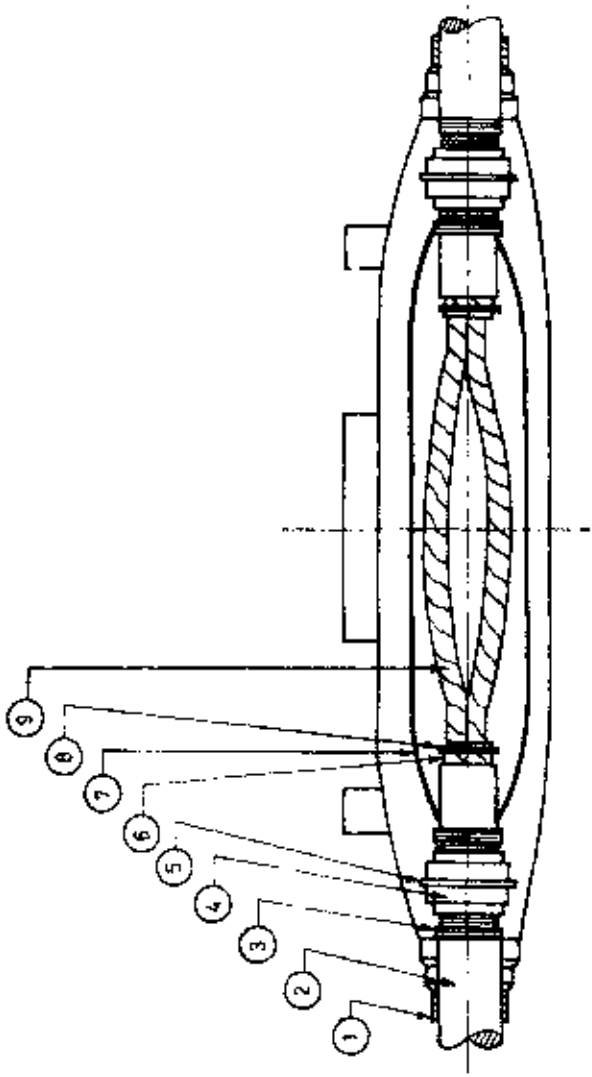

FIG. 17 TYPICAL STRAIGHT THROUGH JOINT FOR PILC CABLES 6·6 AND 11 kV GRADE

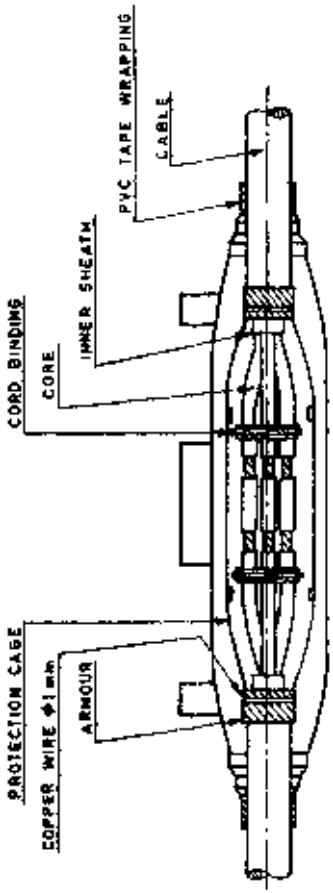

FIG. 18 STRAIGHT THROUGH JOINTS FOR CABLES 3·3 kV AND 6·6 kV GRADE

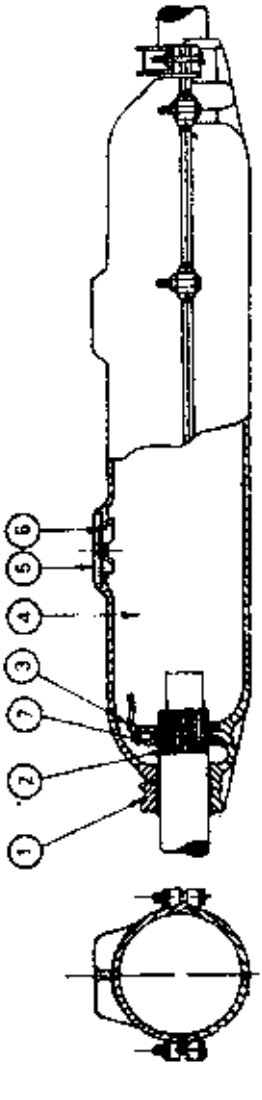

FIG 19 LT STRAIGHT THROUGH JOINT BOX FOR PVC CABLE UP TO 4 CORE 630 mm²

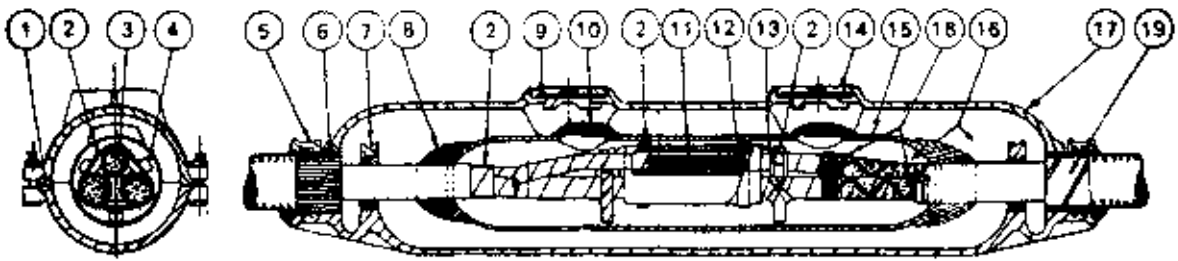

KEY

1. 'V' groove joint
2. Binding tape
3. Impregnated paper separator
4. Porcelain spreader
5. Armour clamp
6. Armour (SWA shown)
7. Sheath bonding clamp
8. Wiped joint
9. CI filling plate
10. Filling cap wiped over
11. Weak back jointing ferrule
12. Impregnated cotton tape (11 kV only)
13. Paper separator positioning tape
14. Recess filled with bituminous compound
15. Lead sleeve filled with bituminous compound
16. Bituminous compound
17. Cast iron box
18. Antimonial lead wire soldered to lead sheath for screened cable only
19. Armour (DSTA shown)

FIG. 20 HT STRAIGHT THROUGH JOINT BOX UP TO 11 kV

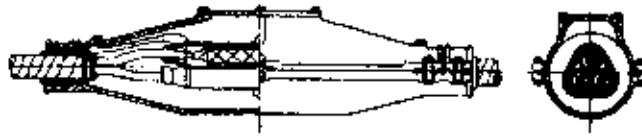

FIG. 21 TYPICAL STRAIGHT JOINT WITH COPPER SLEEVES FOR 33 kV (H TYPE) CABLE SHOWING ALL IMPORTANT FEATURES

12.3.2 *For PVC Cables Up to 11 kV*

12.3.2.1 These joints are preferably done using cold setting casting resins, primarily because of thermoplastic nature of insulation and sheath. Cast iron boxes with bitumen based filling compounds can be used with PVC cables with certain precautions.

12.3.2.2 Typical drawings for cast resin and bitumen compound filled straight through joints are shown in Fig. 22 and 23 respectively.

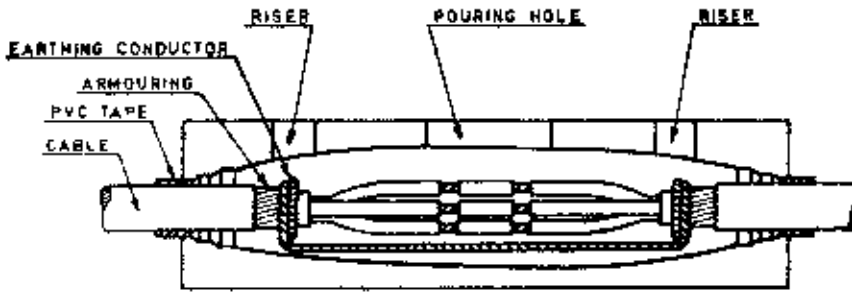

FIG. 22 1·1 kV PVC CABLE JOINT WITH CAST RESIN

12.3.2.3 For 1·1 kV grade, moulds conforming to relevant Indian standard should be used. For voltages above this neither moulds nor casting resins are standardized. Hence cable supplier may be consulted for his advise on selection.

12.3.2.4 While jointing control cables having large number of cores jointing of proper cores should be ensured. Core identification should be properly studied for this purpose.

12.3.3 *For XLPE Cables up to 11 kV*

12.3.3.1 For XLPE cables up to 3·3 kV (unscreened), these joints are done by using cold setting casting resins in suitable moulds.

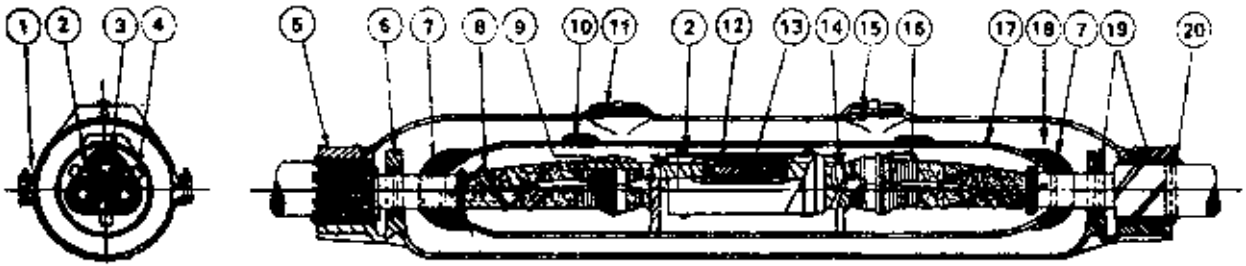

KEY

1. 'V' groove joint
2. Binding tape
3. Impregnated paper separator
4. Porcelain spreader
5. Armour clamp
6. Sheath bonding clamp
7. Wiped joint
8. Antimonial lead wire
9. Impregnated cotton tape buffer (Stress cone)
10. Filling cap wiped over
11. Cast iron filling plate
12. Impregnated cotton tape
13. Weak back jointing ferrule
14. Impregnated Cotton Positioning Tape for separator
15. Recess filled with bituminous compound
16. Antimonial lead wire
17. Lead sleeve
18. Cast iron box filled with bituminous compound
19. Lead tape packing (salvaged from cable)
20. Jute packing (salvaged from cable)

FIG. 23 STRAIGHT THROUGH JOINT BOX WITH LEAD SLEEVE

12.3.3.2 For cables above 3·3 kV and up to 11 kV (screened) self amalgamating tapes (both insulating and semiconducting) are used for providing stress relieving mechanism to these joints. Cold setting casting resins are used for further protection against water and corrosion.

12.3.3.3 All conductors are to be jointed by crimping/compression or welding methods.

NOTE — Jointing by soldering may be resorted to provide the temperature of conductor under short circuit conditions is not likely to exceed 160°C.

12.3.3.4 A typical drawing of straight through joint for HT (high tension) screened type XLPE cable is shown in Fig. 24.

12.4 Tee or Branch Joints

12.4.1 These joints should be restricted to 1·1 kV grade cables. Tee joints on HT cables up to and including 11 kV may be done only in exceptional cases.

12.4.2 These joints are made either using cast resin kits or C.I. Boxes with or without sleeves for PILC cables and cast resin kits for PVC and XLPE cables.

12.4.3 A typical drawing showing the details of 11 kV, tee joint using cast iron box and bitumen compound suitable for 11 kV paper insulated cable is shown in Fig. 25.

12.4.4 A typical cast resin filled tee-joint is shown in Fig. 26. Moulds for such joints should conform to IS : 9646-1980*.

12.5 End Terminations or Sealing Ends

12.5.1 *For PVC Cables*

12.5.1.1 For PVC cables up to 11 kV cast resin and terminations are recommended both for indoor and outdoor connections.

12.5.1.2 Indoor terminations in dry and non-corrosive atmosphere for 1·1 kV grade can either be done by means of brass glands or by simple dressing as shown in Fig. 27.

12.5.1.3 For corrosive and aggressive atmospheres such as those prevailing in chemical, fertilizer, cement, paper mills, etc, cast resin terminations should be adopted.

*Dimensions for moulds suitable for cast resin-based tee-joints for cables for voltages up to and including 1 100 V.

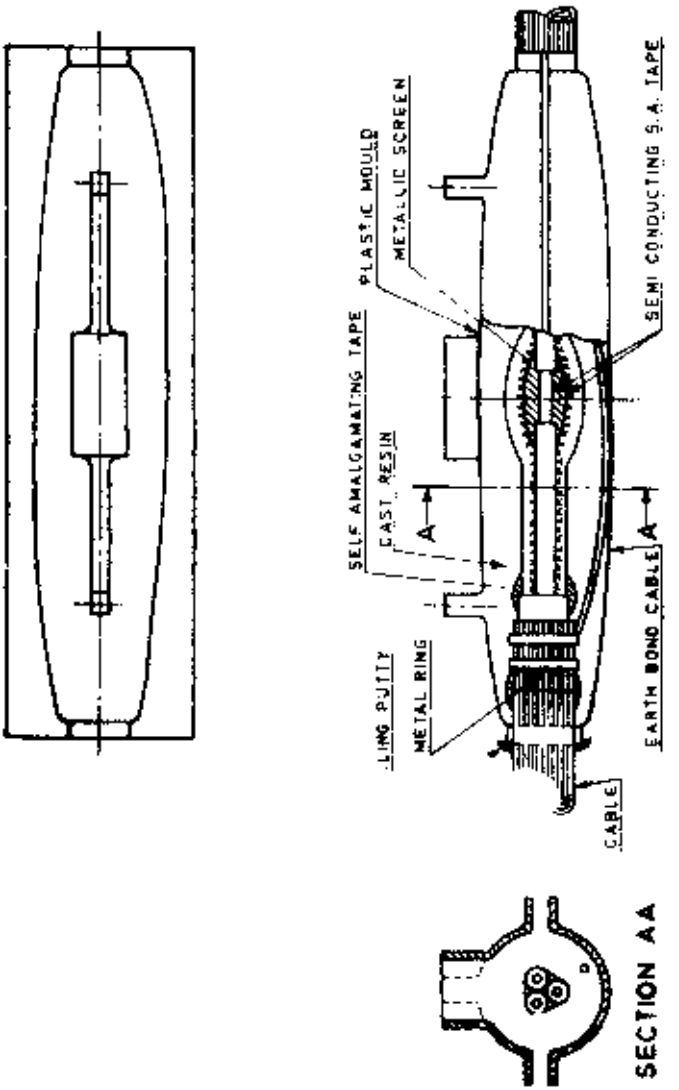

FIG. 24 STRAIGHT THROUGH JOINT FOR HT SCREENED TYPE XLPE CABLE

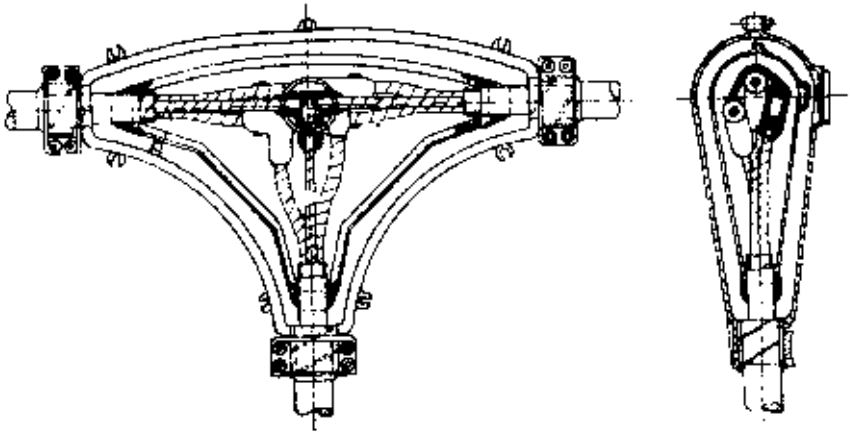

FIG. 25 TEE JOINT OF 11 kV PAPER INSULATED CABLE

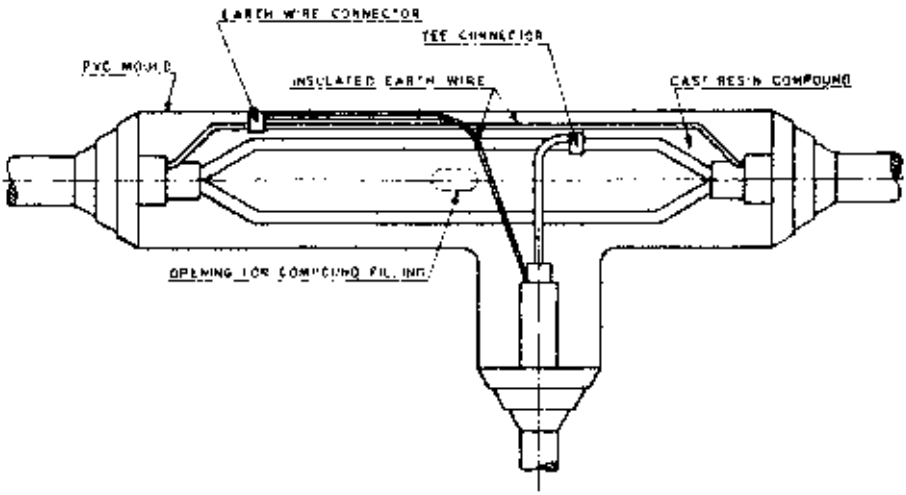

FIG. 26 CAST RESIN FILLED TEE JOINT FOR 1·1 kV PVC INSULATED CABLES

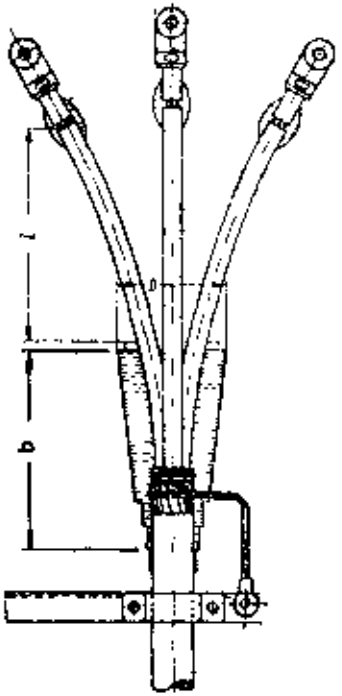

FIG. 27 TERMINATION FOR 1·1 kV PVC CABLES

12.5.1.4 Typical end termination for 11 kV grade is shown in Fig. 28.

12.5.2 *For PILC Cables*

12.5.2.1 Paper insulated cables up to 11 kV may be terminated either using cast resin kits or cast iron boxes. A typical HV dividing box is shown in Fig. 29. Termination procedures of 22 kV and 33 kV grades vary widely with the design of the boxes and type of cables used. Comprehensive jointing instructions should be obtained from the cable manufacturer and should be followed (*see* Fig. 30).

12.5.2.2 Porcelain insulators, where used for terminations, should have insulators conforming to IS : 2099-1973*.

*Specification for bushings for alternating voltages above 1 000 volts (*first revision*).

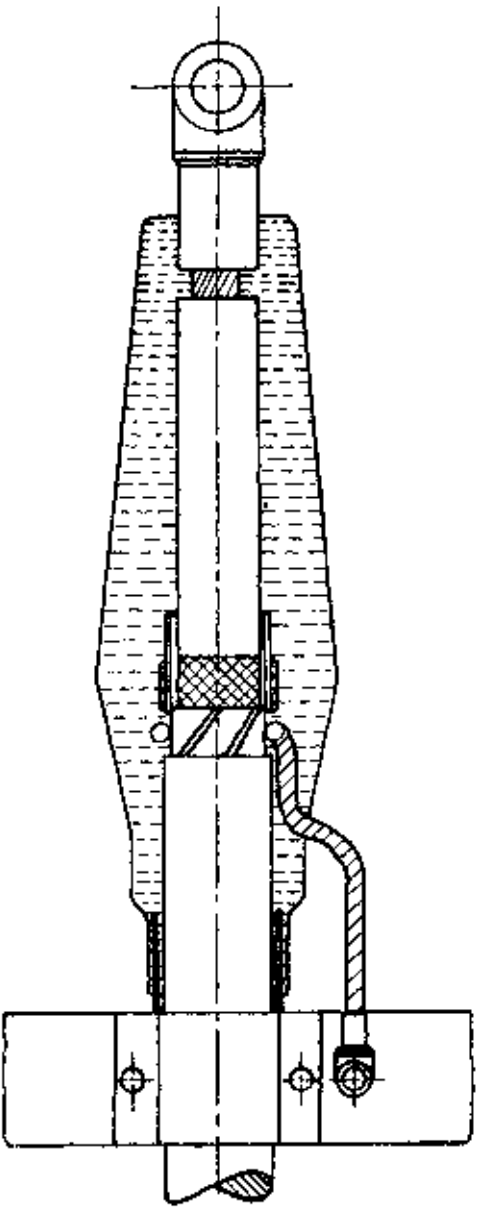

FIG. 28 CAST RESIN TERMINATION FOR 11 kV PVC CABLES

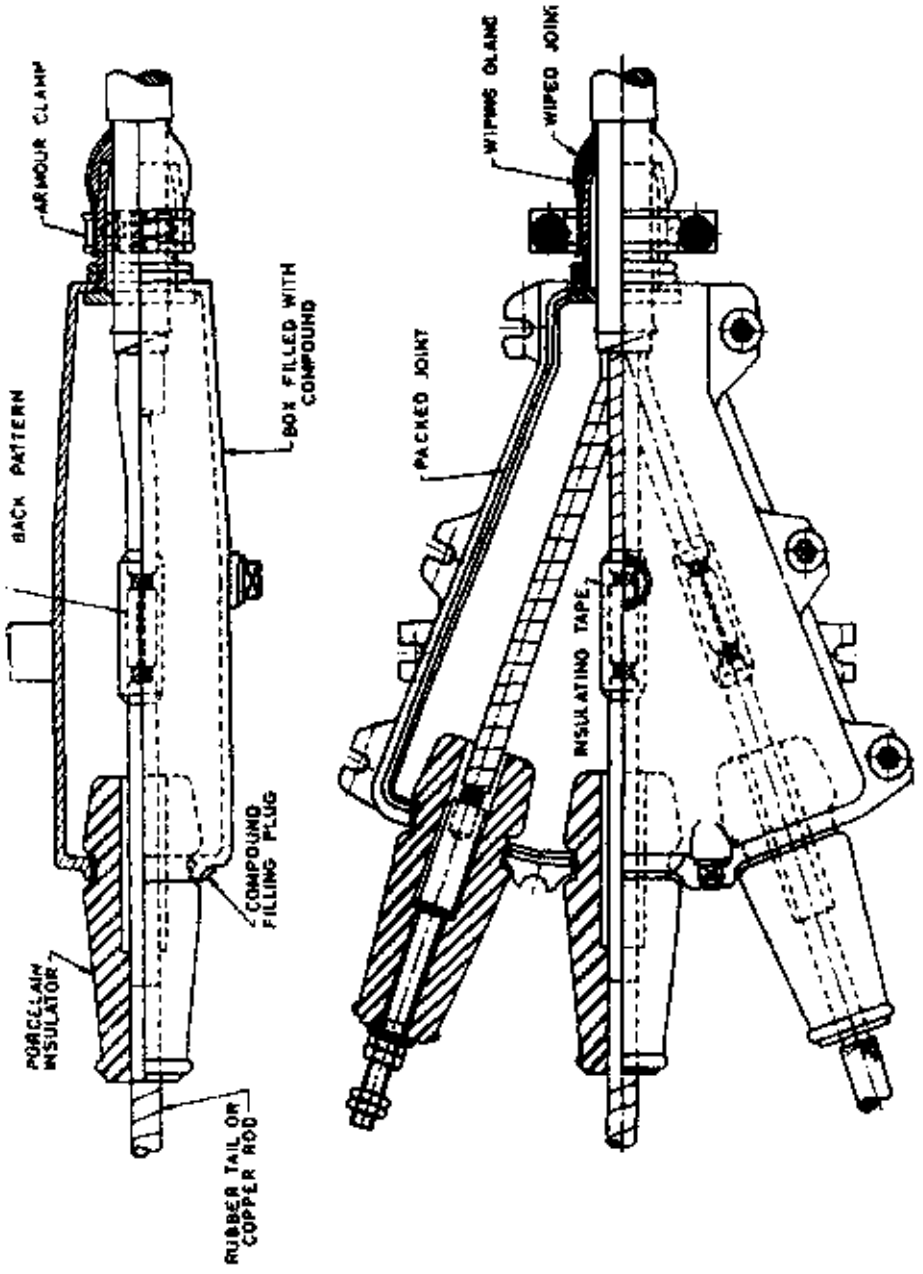

FIG. 29 TYPICAL HV DIVIDING BOX

FIG. 30 TERMINATION OF PILC CABLE 'H' TYPE 33 kV

12.5.3 *For XLPE Cables*

12.5.3.1 Up to 3·3 kV (unscreened) cables, cast resin terminations are recommended for indoor and outdoor terminations.

12.5.3.2 Indoor terminations up to 3·3 kV (unscreened) in dry and non-corrosive atmosphere can be done by means of brass glands only.

12.5.3.3 For indoor terminations up to 3·3 kV (unscreened) in corrosive atmosphere, cast resin terminations may be adopted.

12.5.3.4 For XLPE cables above 3·3 kV and up to 11 kV (screened), self-amalgamating tapes (both insulating and semiconducting) are used for providing stress-relieving mechanism in the joints. Preformed stress-relieving cloths or tubes are also used for stress relieving mechanism in place of self-amalgamating tapes.

12.5.3.5 All conductors of XLPE terminations are to be terminated either by crimping/compression or by welding methods.

12.5.3.6 A typical drawing of 6·6 kV (UE), indoor type cable termination on XLPE cables is given in Fig. 31.

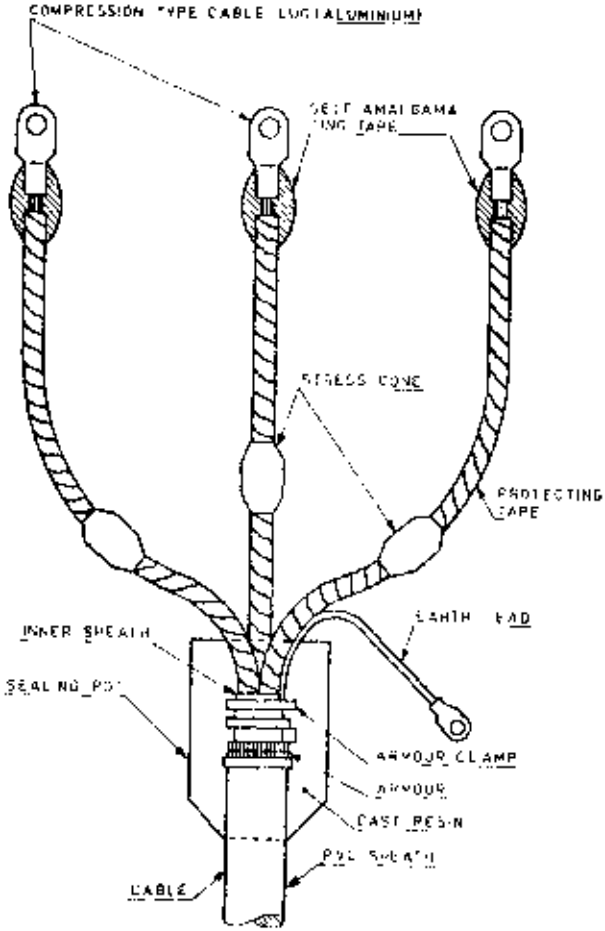

FIG. 31 GENERAL ARRANGEMENT OF 6·6 kV (UE) INDOOR TYPE CABLE TERMINATION ON XLPE CABLE

12.6 Aluminium Conductor Connections

12.6.1 There are number of methods of jointing aluminium conductors. Four standard methods which are most commonly used are:

a) Fluxelss friction solder method (*see* **12.6.2**);
b) Soft soldering method using organic fluxes (*see* **12.6.3**);
c) Welding method (*see* **12.6.4**); and
d) Crimped or compressed connection (*see* **12.6.5**).

12.6.2 *Fluxless Friction Solder Method* — In this method each strand of the conductor is carefully cleared and scraped with scraper tongs to remove oxide film. Then all the strands are tinned by rubbing a special friction solder stick over the heated strands. This is known as metallizing. Aluminium conductor thus prepared may be soldered on to copper cable lugs, ferrule, terminal studs using 60 percent solder. No flux is used in any of the operation. This method is not recommended for jointing conductors in XLPE cables.

12.6.3 *Soldering Method Using Organic Flux*

12.6.3.1 The individual strands should be separated and cleaned thoroughly by a scraper and the impregnation compound and oil if any, should be removed. If necessary the strands can be stepped. The conductors should then be preheated by basting with solder, the temperature of which should be maintained at 316°C or as recommended by manufacturers. The excess solder should then be wiped off quickly and aluminium solder flux should be applied to the conductor by a stiff brush on all sides of conductor.

12.6.3.2 The conductor should then be basted several times with solder. If necessary the flux should be applied again and the conductor basted with solder till a bright shining appearance is obtained.

12.6.3.3 The copper ferrule, which is generally of a weak-back type, should be tinned and fitted on to the conductor and closed firmly but not completely.

12.6.3.4 The ferrule should then be basted with solder and the gap should be filled in with the solder. The ferrule should then be closed firmly and basted with solder, till the solder solidifies. The excess solder should be wiped off and the joint allowed to cool.

12.6.3.5 During jointing operation copious fumes are given off when the flux is heated. These fumes contain small quantities of fluorine and it is, therefore, advisable to avoid inhaling them as far as possible. It is also recommended that proper ventilation be maintained at the place of jointing.

12.6.3.6 Organic fluxes tend to char and are rendered ineffective when exposed to temperature in excess of 300°C. Emphasis should, therefore, be laid on the need to control pot temperature.

12.6.4 *Welding Method* (*see* Fig. 32) — Welding method gives the best possible results. Welded conductor joints have lesser resistance and equal or better mechanical strength than the conductor itself. Welding, therefore, should be given preference for all larger cross sections. For smaller

cross section welding may not always be feasible or economical. In this method the end of the stranded conductor are first welded to the cable lug, terminal stud or to each other, in open or closed mould using aluminium welding rods or strands taken from conductor. After cooling welded connections are filed smoothened and cleaned.

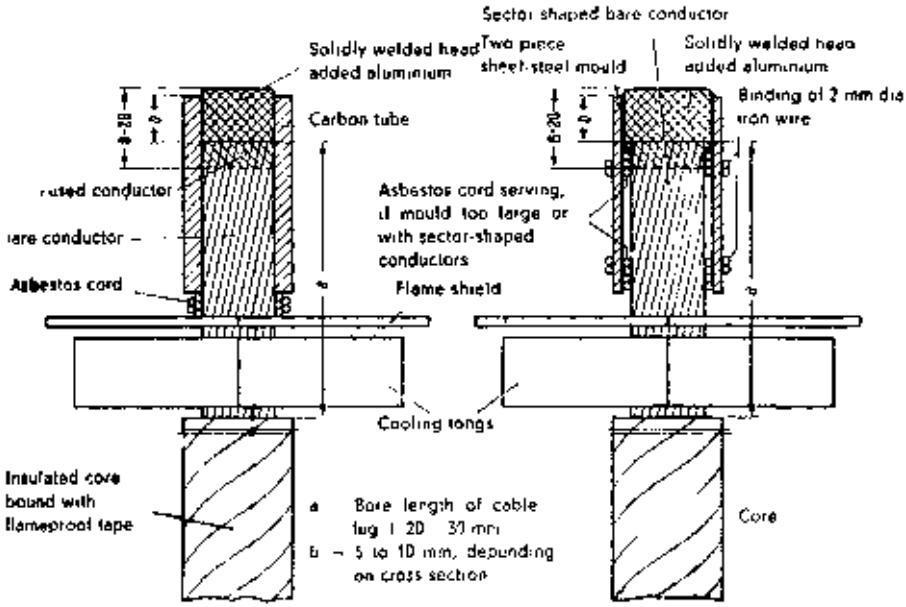

32A Conductor ends with slip-on carbon tube for solid welding

32B Conductor ends prepared for solid welding, with mould in place

FIG. 32 WELDING METHODS

12.6.5 *Crimped or Compressed Connections* — In this method conductor and lug ferrules are pressed together firmly by means of tools and dies to form a joint. The methods normally used are indent compression, hexagonal compression or circular compression. Tools and accessories should meet the requirement of relevant Indian Standards where available.

13. EARTHING AND BONDING

13.1 The metal sheath, metal screen (if any) and armour of any cable should be efficiently earthed at both ends.

13.2 In case of single-core cables of larger sizes, the armour, lead sheath and metal screen, if any, is bonded at times only at one point. Attention is drawn in this case to the presence of standing voltages along armour or lead sheath and to the considerable increase in such voltages when cables carry fault currents. These voltages must be taken into account when considering safety and outer sheath insulation requirement.

13.3 All metal pipes or conduits in which the cables have been installed should be efficiently bonded and earthed.

13.4 Where cables not having metallic sheath are used, embedding additional earth electrodes and connecting the same with steel armour of cable becomes necessary.

13.5 Earthing and bonding should be done in accordance with IS : 3043-1966*

SECTION 4 TESTING OF CABLE INSTALLATION

14. TESTING AND ELECTRICAL MEASUREMENTS OF CABLE INSTALLATIONS

14.1 Insulation Resistance Test on Newly Installed Cables Before Jointing — All new cables should be tested for insulation resistance before jointing. After satisfactory results are obtained cable jointing and termination work should commence. It should be noted here that insulation resistance test gives only approximate insulation resistance and the test is meant to reveal gross insulation fault(s). A fairly low insulation resistance reading compared to the values obtained at factory testing should not be a cause of worry since the insulation resistance varies greatly with parameters such as length and temperature. This is particularly more pronounced in the case of PVC cables. The voltage rating of the insulation resistance tester for cables of different voltage grades should be chosen from the following table:

Voltage Grade of Cable	*Voltage Rating of IR Tester*
1·1 kV	500 V
3·3 kV	1 000 V
6·6 kV	1 000 V
11 kV	1 000 V
22 kV	2·5 kV (*see* Note)
33 kV	2·5 kV (*see* Note)

NOTE — For long feeders, motorized insulation resistance tester should be used.

*Code of practice for earthing.

14.1.1 More accurate insulation resistance values can be measured only by a portable resistance measuring bridge.

14.2 Test Result of Completed Cable-Installation — The test of completed installation may be measured and entered into record book for comparison purposes during service life of cable installation and during fault location.

14.2.1 *Insulation Resistance* — Insulation resistance is measured by a suitable bridge. In non-screened cables, the insulation resistance of each core is measured against all the other cores and armour/metal sheath connected to earth. With screened construction the insulation resistance of each core is measured against all the other cores and the metal screen connected to earth.

14.2.2 *Conductor Resistance* (dc)

14.2.2.1 — The resistance of conductor is measured by a suitable bridge. For this purpose conductors at other end are looped together with connecting bond of at least same effective electrical cross-section as conductor. The contact resistance is kept to a minimum by proper clamped or bolted connections. With properly installed and jointed cables, values thus measured and corrected to 20°C, are in general agreement with values given in test certificates.

14.2.2.2 The measured loop resistance is converted to ohms per km per conductor as :

$$R_t = \frac{R}{2L}$$

where

R = measured loop resistance in ohms at temperature, t°C;

R_t = measured resistance per conductor at t°C in ohms; and

L = length of cable (not the loop) in km.

The ambient temperature at the time of measurement to be recorded and the conductor resistance to be corrected to 20°C by the following formula:

$$R_{20} = \frac{R_t}{(1+\alpha)(t-20)} \text{ ohm/km at } 20°C$$

where

R_{20} = conductor dc resistance at 20°C in ohm/km,

t = ambient temperature during measurement in °C, and

α = temperature coefficient of resistance ($3{\cdot}93 \times 10^{-3}$ ohms/°C for aluminium).

14.2.3 *Capacitance*

14.2.3.1 For unscreened cables, capacitance is measured for one conductor against others and metal sheath/armour connected to earth. In case of screened cable it is measured between conductor and screen. Capacitance bridge is used for this purpose. This measurement may be carried in case of cables above 11 kV; alternatively values given in test certificate are considered sufficient.

14.2.4 *High Voltage Test*

14.2.4.1 Cables after jointing and terminating are subjected to dc high voltage test. The recommended values of test voltages are given in Table 6. The leakage current shall also be measured and recorded for future reference.

TABLE 6 DC TEST VOLTAGES AFTER INSTALLATION (BEFORE COMMISSIONING)

Rated Voltage of Cable	Test Voltage Between		Duration
	Any Conductor and Metallic Sheath/Screen/Armour	Conductor to Conductor (For Unscreened Cables)	
U_o/U			
kV	kV	kV	Minutes
(1)	(2)	(3)	(4)
0·65/1·1	3	3	5
1·9/3·3	5	9	
3·3/3·3	9	9	
3·8/6·6	10·5	18	
6·6/6·6	18	18	
6·35/11	18	30	
11/11	30	30	
12·7/22	37·5	—	
19/33	60	—	

14.2.4.2 Generally dc test should be preferred as test equipment required is compact, easily portable and power requirements are low.

14.2.4.3 The cable cores must be discharged on completion of dc high voltage test and cable should be kept earthed until it is put into service.

14.2.4.4 DC test voltage for old cables is 1·5 times rated voltage or less depending on the age of cables, repair work or nature of jointing work carried out, etc. In any case, the test voltage should not be less than the rated voltage. Test voltage in these cases should be determined by the Engineer-in-charge of the work.

14.2.4.5 It may be noted that frequent high voltage tests on cable installations should not be carried out. This test should be carried only when essential. During the high voltage test, all other electrical equipment related to the cable installation, such as switches, instrument transformers, bus bars, etc, must be earthed and adequate clearance should be maintained from the other equipment and framework to prevent flash-overs.

14.2.4.6 In each test, the metallic sheath/screen/armour should be connected, to earth.

15. CABLE INSTALLATION PLAN

15.1 On completion of laying, terminating and jointing of the cables, a plan should be prepared, which should contain the following details of the installation.

a) Type of cables, cross-section area, rated voltage. Details of construction, cable number and drum number;

b) Year and month of laying;

c) Actual length between joint-to-joint or ends;

d) Location of cables and joints in relation to certain fixed reference points, for example, buildings, hydrant, boundary stones, etc;

e) Name of the jointer who carried the jointing work;

f) Date of making joint; and

g) Results of original electrical measurements and testing on cable installation.

15.2 All subsequent changes in the cable plan should also be entered.

SECTION 5 MAINTENANCE

16. MAINTENANCE OF CABLE INSTALLATION

16.1 General — The maintenance of cable installation includes inspection, routine checking of current loading, maintenance and care of all cables and end terminations.

16.2 Inspection

16.2.1 Whenever the cables or joints are accessible as in manholes, ducts, distribution pillars, etc, periodical inspection should be made so that timely repairs can be made before the cables or joints actually cause

by interruption to service. The frequency of inspection should be determined by each electric supply undertaking from its own experience. Important heavily loaded lines will require more frequent attention than less important lines.

16.2.2 Cables laid direct in the ground are not accessible for routine inspection, but such cables are often exposed when the ground is excavated by other public utilities for installing or repairing their own properties. Preventive maintenance in the form of regular inspection of all digging operations by other utilities or persons, carried out in areas where electric cables exist is of utmost importance.

16.2.3 In a city where the roads are congested with services of other utilities, the likelihood of damage to electric cables is very high. Cable inspectors should patrol the various sections of the city and where it is found that cables are exposed, these should be examined thoroughly for any signs of damage: such as deformation or dents in the cable or damage to earthenware troughs or ducts.

16.3 Checking of Current Loading

16.3.1 The life of paper-insulated cables is considerably reduced through overloading. It is, therefore, essential to check the loads as frequently as possible to ensure that the cables are not loaded beyond the safe current-carrying capacities. The derating factors due to grouping of several cables, higher ambient ground temperature and higher thermal resistivity of soil, should not be neglected.

16.3.2 In the case of HV feeder cables emanating from generating station, receiving station, or sub-station, panel-mounted ammeters which are usually provided, should be read daily. In the case of medium voltage distribution cables emanating from distribution pillars, the loads are conveniently checked by 'clip-on' type portable ammeters. Distributor loads should be checked at intervals not exceeding three months.

16.4 Maintenance of Cables — Repairs of cables generally involve replacement of a section of the defective cable by a length of new cable and insertion of two straight joints. All repairs and new joints in connection with repairs should be made in the same manner as joints on new cables (*see* 12). In some cases where the insulation has not been damaged severely, or where moisture has not obtained ingress into the insulation, it may only be necessary to install a joint at the point of cable failure.

16.5 Maintenance of End Terminations — In case of cable termination filled with liquid insulating compound, it is necessary to check periodically the compound level in the termination boxes and to add compound if required.

16.6 Protection of Electric Cable When Exposed by Other Public Bodies — Under the Indian Electricity Act, 1910, it is mandatory for any person proposing to excavate a public road, to give prior intimation to the owner of electric cables that lay under the ground.

16.6.1 When any cables are exposed during the work of other public bodies and such cables are required to be temporarily supported until the work is completed, the overhanging length of the cable should be well supported either by means of temporary piers erected below the cable at short intervals or by lashing the cable to a wooden plank laid below it and supported by further lashings at short intervals to a wooden beam placed above the trench parallel to the cable. Particular attention should be given to joints, as the slightest tension may result in the pulling out of the conductors at the ferrules in the joints.

16.6.2 If the depth of the excavation carried out by another public body below the cable is considerable, it is necessary to build a permanent masonary support below the cable before filling in the trench. This eliminates the possibility of the cable sinking due to subsidence of the backfilling as it gradually consolidates. On completion of the work, the original protection covers should be carefully replaced over a bedding of soft earth and the trench filled in.

SECTION 6 FAULT LOCALIZATION

17. FAULT LOCALIZATION OF CABLE

17.1 General

17.1.1 In order to restore supply at the earliest possible movement after the occurrence of a fault, it is essential to proceed with the fault localization in a systematic manner so that no time may be wasted by using unsuitable tests or carrying out unnecessary excavation work.

17.1.2 The first step is to isolate the faulty cable, as far as possible, by opening any links or section switches, and thus reducing the length on test to a minimum. The faulty length of cable having been isolated, any exposed sealing ends or other insulators should be cleaned, and insulation resistance tests and conductor resistance tests made as described under **17.2**.

17.1.3 Excavation is usually carried out at the located position and also at the nearest joint to this. While excavation is proceeding, the calculations may be checked and the test may be repeated from other end of the cable. If possible, the location should be checked by another independent test. If the equipment is available to carry out the induction test (*see* **17.3.9**), or capacitor discharge test (*see* **17.3.10**), the fault location can be pin-pointed in many cases.

17.1.4 If the ground is opened and the cable exposed for about 4·5 or 9 m on either side of the located position without any signs of the breakdown being seen, the most usual method is to break open the joint nearest to the located position and retest from the joint position.

17.1.5 It occasionally happens that there are no external signs of failure, the sheath and armour being undamaged. If a second test made after the joint has been opened indicates the same position as the first. this is probably the correct position.

17.1.6 In the case of a heavy fault on a HV cable, it will often be found that the pavement is cracked or the paving slabs are displaced and observation of disturbances of this nature may save much time. Again, local residents can sometimes give useful information as to subterranean noises which may have been heard at the time corresponding with the time of breakdown.

17.1.7 The majority of failures are caused by mechanical damage, and an inspection of the route near the suspected position may often show that the ground has been opened for laying cables, pipes, etc, or that a gate post has been put up above the cable.

17.2 Analysis of Fault

17.2.1 Much time may often be saved by making a careful analysis of the fault conditions before the actual location test is made. If this is not done, it is possible that the wrong type of test may be applied and a misleading result obtained. The exact nature of the fault can be ascertained by taking the following tests which may be made with an insulation testing set and a Wheatstone bridge or a resistance tester of the bridge type. If none of the cores is likely to be burnt through or broken, tests (a) and (b) given below may be made and the conductor resistance tests limited to the cores actually used during the location :

a) Measure insulation resistance between each core and earth with the far end of the cable open and free from earth;

b) Measure insulation resistance between cores with the far end of the cable as given in (a); and

c) Measure conductor resistance of each pair of conductors with all conductors connected together and free from earth at far end of line, and compare with the calculated resistance.

17.2.2 The measured conductor resistance should agree closely with the calculated value, but if a considerably higher value is obtained on any pair it is probable that one or both of the conductors are severed at the fault. If an unbroken loop can be found in the cable, it is possible to test each conductor against one of the continuous conductors and thus ascertain which conductors are broken and which are continuous, but if no loop can be found, the conductors should be earthed at the far end and a test to earth made on each conductor in turn to determine if an unbroken conductor remains. In the case of power cables, the conductor resistance test may indicate that the conductors have burned through and fused together. In such a case, core-to-earth tests (with all cores earthed at the far end) should be made.

17.2.3 It will, in general, be found that the insulation resistance of a cable with a 'wet' fault due to moisture entering through damaged sheathing or at joints will gradually increase if a positive potential be applied to the faulty core, while the application of a negative potential will cause it to decrease. When the amount of moisture is very small, the above remarks still apply if the voltage is low but if a potential of several hundreds of volts is applied, the fault tends to dry out and the insulation resistance rises considerably.

17.2.4 The nature of fault having been determined, it becomes necessary to decide upon the most suitable location method to adopt. It is a good practice to choose a test which can be applied with the fault conditions as found. Having obtained the location with one method, the fault conditions may be changed, if necessary, by fault burning to suit an alternative method.

17.2.4.1 *Fault burning method* -- For obtaining continuous good results in locating cable faults, it is essential that test conditions are suitable for the methods employed. After initial tests are completed, the fault conditions can be converted to suit a particular test by 'fault burning'. This process consists of a judicious application of voltage, which has the effect of lowering the fault resistance by burning it down. Large ac test sets or in case of higher voltages, rectifiers have been used for fault burning. But for large currents required for burning down the faults, the size of test equipment becomes very bulky. Also, in case of high breakdown voltage, the application of dc does not always result in permanent low resistance fault. The resonance fault burning instrument,

which obtains high voltage from an oscillating circuit has been developed to overcome the same. Its dimensions and weight in relation to output are very small.

17.2.5 Since the greater portion of the cable in this country is laid direct in the ground, the suggested tests are intended to apply particularly to cables installed in this manner.

17.3 Classification of Fault Localization Tests — The fault localization tests may be classified as follows :

a) Direct loop test (*see* **17.3.1**),
b) Varley loop test (*see* **17.3.2**),
c) Murray loop test (*see* **17.3.3**),
d) Fall of potential test (*see* **17.3.4**),
e) dc charge and discharge test (*see* **17.3.5**),
f) ac capacitance test (*see* **17.3.6**),
g) ac inductance test (*see* **17.3.7**),
h) Radar test (*see* **17.3.8**),
j) Induction test (*see* **17.3.9**),
k) Capacitor discharge test (**17.3.10**),
m) Pulse echo test (*see* **17.3.11**), and
n) Acoustic cable tracing and fault locator (*see* **17.3.12**).

17.3.1 *Direct Loop Test* — This test is a modification of the Murray loop test where instead of the slide wire being connected across the sound core and faulty core at the same and a CTS or a VIR cable is made to run along the surface exactly above the route of the cable and connected to the two ends of the faulty core to form a slide wire. The battery terminal is connected to a long piece of wire at the other end of which a knife edge is provided to make contact with the CTS or VIR cable placed above ground as described before. The point where the balance is obtained is thus the exact point where the fault exists. A reference to Fig. 33 makes this clear.

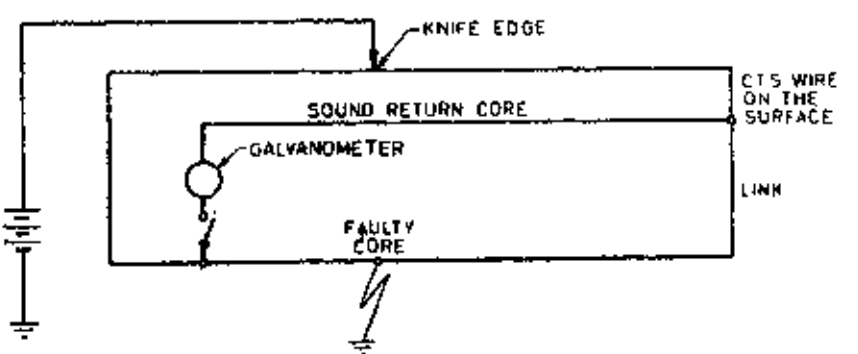

FIG. 33 DIRECT LOOP TEST

17.3.2 *Varley Loop Test* — This test provides for the measurement of the total loop resistance instead of obtaining it from the known lengths of cable and their resistance per unit length. The connections are shown in Fig. 34 for both the ground and short-circuit test — (A) and (B) respectively. In this test the ratio arms P and Q are fixed, balance being obtained by adjustment of a variable resistance S, placed in series with the section of the loop having a smaller resistance. When the balance is obtained with the throw-over switch in the battery circuit on contact e, then, in either of the above tests, the magnitude of the resistance X may be obtained from the setting of S for balance, together with the values of P and Q and of the resistance $R + X$ (that is the total resistance of the loop)

At balance, in either the ground or short-circuit test,

$$\frac{P}{Q} = \frac{R}{X + S}$$

or $$\frac{P + Q}{Q} = \frac{R + X + S}{X + S}$$

Hence, $$X + S = \frac{Q(R + X + S)}{P + Q}$$

or $$X = \frac{Q(R + X + S)}{P + Q} - \frac{S(P + Q)}{P + Q}$$

$$= \frac{Q(R + X)}{P + Q} - \frac{SP}{P + Q}$$

Now, P, Q and S being known, $R + X$ may be measured by throwing-over to contact d and obtaining a balance by adjustment of S as in the ordinary Wheatstone bridge network. In the ground test shown in Fig. 34A at balance,

$$\frac{P}{Q} = \frac{R + X}{S_1}$$

where

S_1 is the new setting of S. Thus $R + X$ can be found. In Fig. 34B at balance,

$$\frac{P}{Q} = \frac{S_2}{R + X}$$

where

S_2 again is the required setting of S_2 for balance. The measured value of $R + X$ is then used in the calculation of X, from whose value the position of the fault is obtained as before.

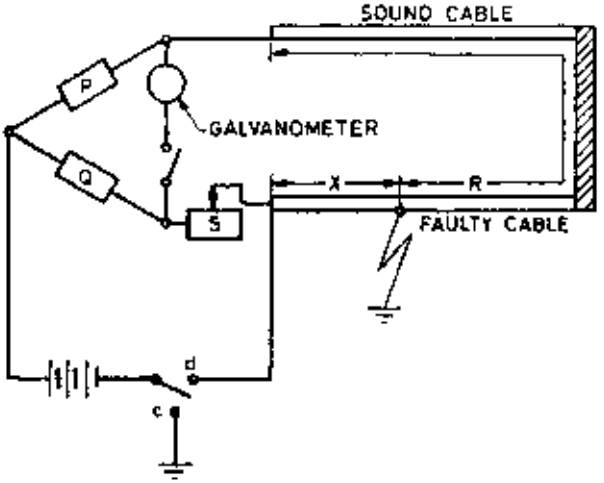

34A Circuit diagram for ground fault

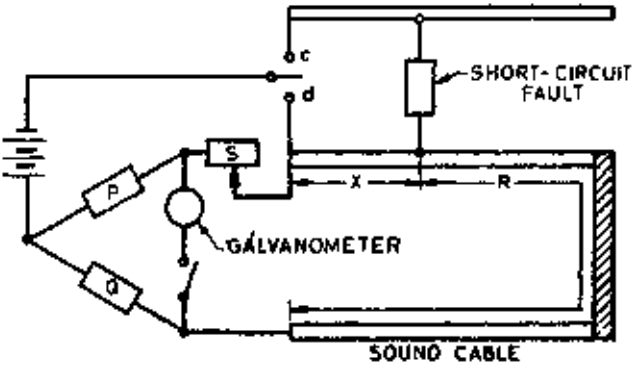

34B Circuit diagram for short-circuit fault

FIG. 34 VARLEY LOOP TEST

17.3.3 *Murray Loop Test*

17.3.3.1 This is the most accurate method of locating faults and should be made use of whenever circumstances permit. In its simplest form, the faulty conductor is looped to a sound conductor of the same cross-sectional area, and a slide wire or resistance box with two sets of coils is connected across the open ends of the loop. A galvanometer is also joined across the open ends of the loop and a battery or a dc hand generator supplies the current for the test (*see* Fig. 35). Balance is obtained by adjustment of the slide or resistance and the fault position is given by the formula:

$$\text{Distance to fault} = \frac{a}{a+b} = \text{loop length}$$

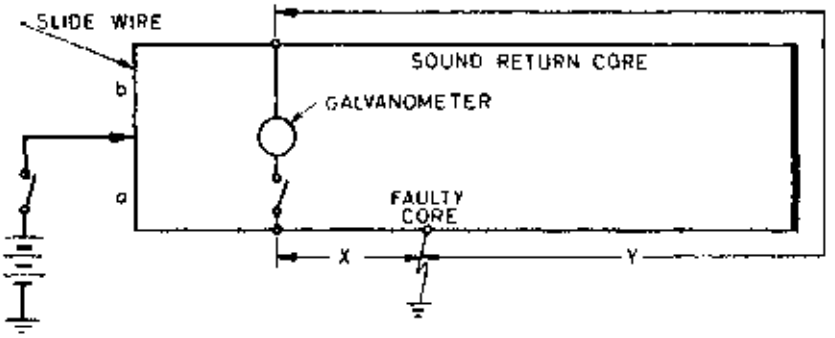

35A Using slide wire

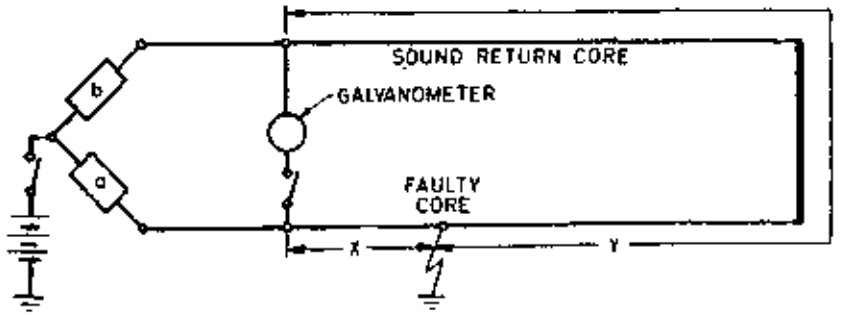

35B Using resistance box

FIG. 35 MURRAY LOOP TEST

where

a = length (or resistance) of the bridge arm joined to the faulty core;

b = length (or resistance) of the bridge arm joined to the sound core: and

$x + y$ = loop length, that is twice the route length.

NOTE — When a loop test is taken on a cable made up of length of different cross-sections and conductor material, it is necessary to find out the 'equivalent length' of the loop which may be greater or less than the actual loop length.

The cable will usually consist mainly of one size and this may be taken as standard. The equivalent length of each of the other sizes is given by:

$$\text{Equivalent length} = \text{actual length} \times \frac{\text{cross-section of standard}}{\text{cross-section of cable}}$$

The equivalent lengths of the various portions of the loop are added and the equivalent loop length thus obtained. The distance to the fault in equivalent length having been found out, it is necessary to convert it to actual distance of the fault.

This is, however, not necessary if the size and the conductor material of the cable is same throughout.

17.3.3.2 In the case of high resistance faults, either the battery should be substituted by a high voltage dc supply obtained through a rectifier set or the galvanometer should be replaced by a sensitive electronic detector.

17.3.3.3 *Modified Murray loop test* — When a sound return of the same cross-section as the faulty conductor is not available, the following modified forms of Murray loop test are adopted, details of which are usually found in text-books:

a) Murray loop test from each end (*see* Fig. 36).

$$\text{Distance of fault from } A \text{ end} = \frac{\dfrac{a}{a+b}}{\dfrac{a}{a+b} + \dfrac{a_1}{a_1+b_1}} \times \text{route length}$$

when a slide wire is used, $a + b = a_1 + b_1$ and the formula reduces to:

$$\text{Distance of fault from } A \text{ end} = \frac{a}{a+b_1} \times \text{route length.}$$

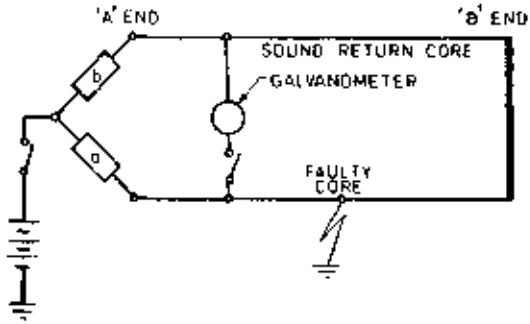

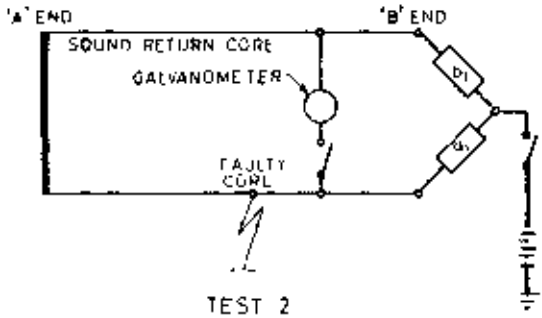

FIG. 36 MURRAY LOOP TEST FROM EACH END
(WITH ONE RETURN OF UNKNOWN RESISTANCE)

b) Murray loop test from one end using fisher connection (*see* Fig. 37).

$$\text{Distance from test end} = \frac{a\,(a_1 + b_1)}{a_1\,(a + b)} \times \text{route length}$$

If slide wire is used, the formula reduces to:

$$\text{Distance from test end} = \frac{a}{a_1} \times \text{route length}$$

NOTE — For Test 2, a three volt battery is suitable while the voltage for battery for Test 1 is determined by the fault resistance.

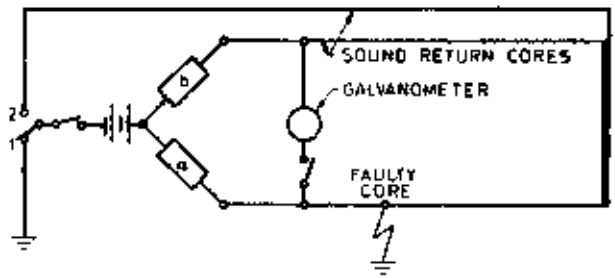

TEST 1

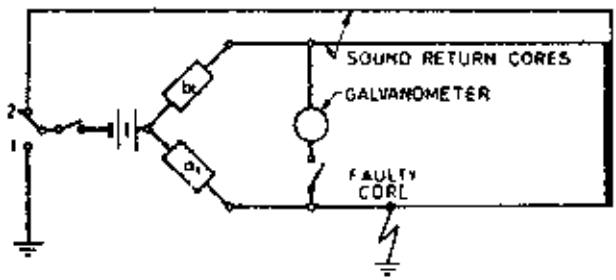

TEST 2

FIG. 37 MURRAY LOOP TEST WITH TWO RETURNS OF UNKNOWN RESISTANCE (FISHER TEST)

c) Murray loop test from using overlap modification (*see* Fig. 38).

$$\text{Distance of fault from } A \text{ end} = \frac{\dfrac{a_1 - b_1}{a_1 + b_1}}{\dfrac{a_1 - b_1}{a_1 + b_1} + \dfrac{a - b}{a + b}} \times \text{route length}$$

If a slide wire is used, the formula reduces to:

$$\text{Distance of fault from } A \text{ end} = \frac{a_1 - b_1}{(a_1 - b_1) + (a - b)} \times \text{route length}$$

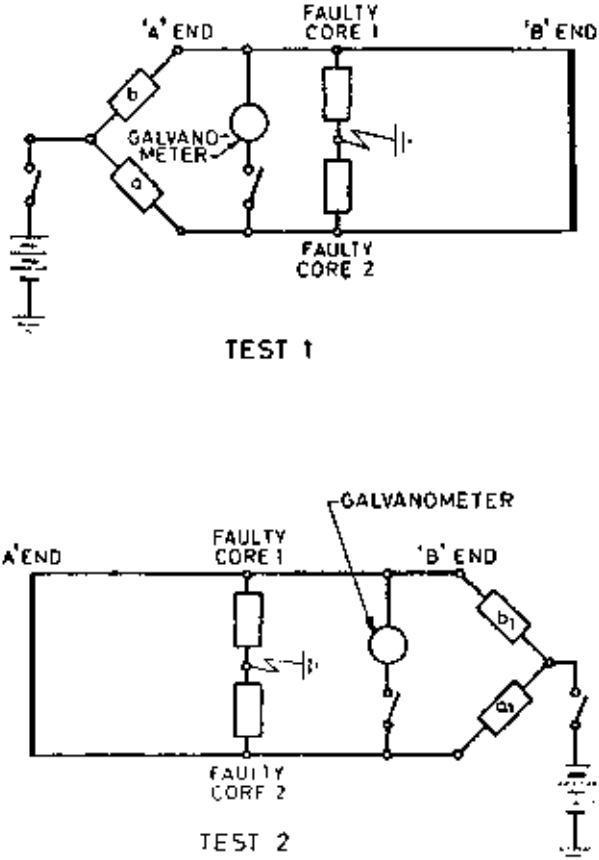

FIG. 38 PHASE TO PHASE FAULT WITH MURRAY LOOP TEST WITH NO SOUND RETURN (OVERLAP METHOD)

17.3.4 *Fall of Potential Test* — In this test, the principle involved depends upon the measurement of the voltage drop on the cable conductor when a current is flowing through it. The only essential instruments consist of an accumulator, rheostat, an ammeter and a low reading, moving-coil voltmeter. The measurements give the voltage drop up to the fault and by comparing the voltage measurements made from each end, the position of the fault can be readily calculated. There are many different circuit arrangements and the accuracy is not as high as that of the Murray loop test (*see* Fig. 39).

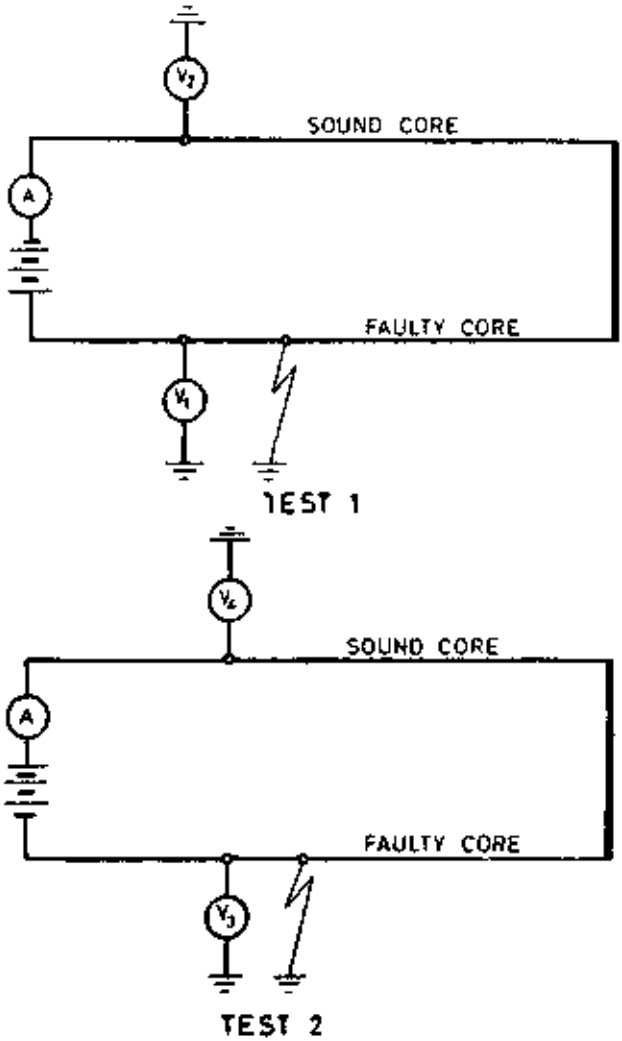

FIG. 39 FALL OF POTENTIAL TEST

$$\text{Distance of fault from test point} = \frac{V_1}{V_1 + V_2} \times \text{loop length}$$

NOTE — To eliminate earth currents and emf which is usually present in the fault, it is necessary to take the readings, V_1 and V_2 and then reverse the battery and take a set of readings V_3 and V_4. The true readings are given by:

$$\frac{V_1 \pm V_3}{2} \text{ and } \frac{V_2 \pm V_4}{2}$$

17.3.5 *DC Charge and Discharge Test* — This method is used for broken cores with high resistance to earth. The usual method of measuring the capacity is to charge the cable under test to a ceratin voltage for about 15 seconds and then discharge it through a moving-coil galvanometer, the point to which the needle kicks being noted. A similar test is next made on a standard condenser of known capacity. For the purpose of locating breaks, it is usually sufficient to measure the relative values of capacity from each end of the broken core. To avoid false readings, it is necessary to earth all broken cores at the far end and all cores except the one under test at the test point (*see* Fig. 40).

$$\text{Distance of fault from } A \text{ end} = \frac{\text{Deflection from } A \text{ end} \times \text{route length}}{\text{Deflection from } A \text{ end} + \text{deflection from } B \text{ end}}$$

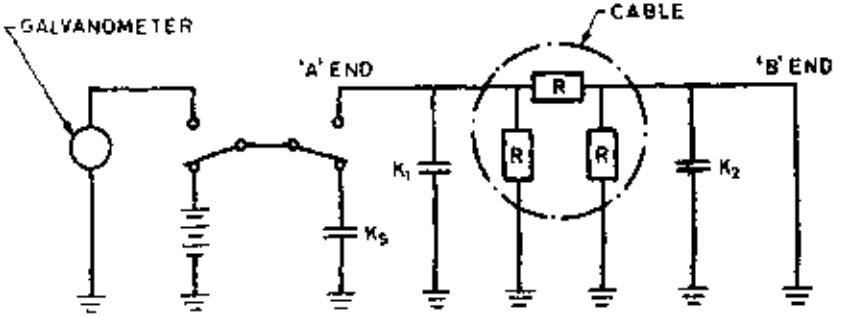

K_s = Standard condenser.
K_1 K_2 = Capacitances of the sections of the faulty cable to ground, and
R = Resistance of the burnt portion of the cable.

FIG. 40 DC CHARGE AND DISCHARGE TEST

17.3.6 *AC Capacitance Test* — In the case of open-circuit faults with low insulation resistance down to about 100 ohms to earth, the ac bridge test is suitable. Most faults of this type can be located with the aid of a compensated capacitance bridge which embodies a resistance shunted across the variable capacity arm for balancing out the resistance to earth at the break (*see* Fig. 41).

17.3.7 *AC Inductance Test* — If the resistance of the fault is less than 30 ohms, the ac inductance test may be used. The test is carried out with an ac bridge in much the same way as the ac capacitance test. The standard ac bridge is usually arranged to enable both the capacitance and inductance tests to be made (*see* Fig. 41).

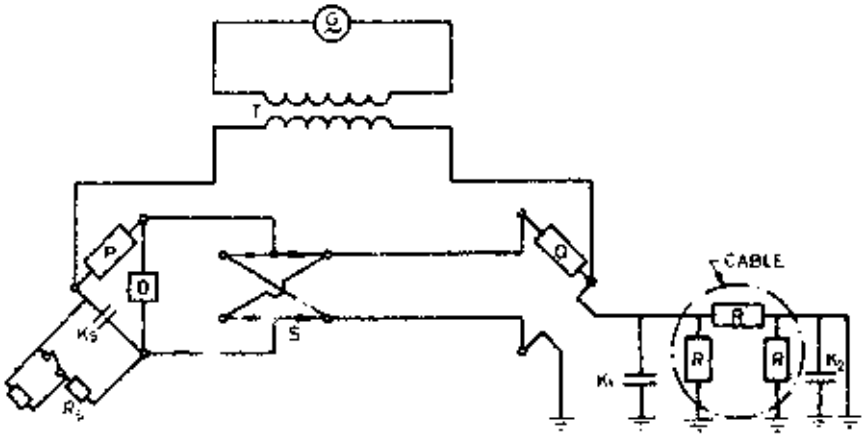

PQ = 100/100 ohm ratio arms;
K_3 = 0-10 MFD variable condenser;
R_3 = 0-1 M Ω variable resistance;
T = Balanced screened transformer;
D = Detector;
S = Double pole, double throw switch; and
K_1 K_2 = Capacitances of sections of the faulty cable to ground.

FIG. 41 COMBINED INDUCTANCE AND CAPACITANCE BRIDGE

17.3.8 *Radar Test* — In this test, short electric voltage impulses are impressed upon the cable. The impulses are reflected and the reflection from the faults (insulation failure or conductor break) can be differentiated from those obtained from cable joints, when viewed on the screen, of a cathode ray tube. From a scrutiny of the image on the screen, the length of the cable involved and the proportionate distance to the fault can be determined. It is not very essential to have conductor data for computing results. This test can be used for all types of faults. High ohmic earth faults, however, have to be burnt down by fault burning (*see* 17.2.4.1).

17.3.9 *Induction Test* — In this test, by the use of a fault burning set, the fault is first converted as a core to core fault. An audio-frequency current is passed through the cable loop thus formed and a search coil

with head-phones and an amplifier tuned to this signal is used to trace the signal along the cable route. At the point where the signal current leaves the faulty core, there is change in the note heard in the head-phones, which thus gives a direct indication of the fault position.

17.3.10 *Capacitor Discharge Test* -- In this test, the energy stored in a large bank of capacitor is discharged into the faulty core so that the noise created at the fault position can be detected above ground. A bank of capacitors is connected to the faulty core through a spark gap. The capacitors are charged from high voltage dc test set and the spark gap is set to flash over at suitable voltage. The discharge is produced at the fault at regular intervals. It is then necessary to listen in around the region of the location indicated by some previous test. The periodic noise will be audible, with the use of an acoustic detector. The intensity of the noise is maximum above the exact location of fault. It is desirable to set the spark gap to flash-over at as high a voltage as permissible to obtain good results. In case, the discharge does not occur even at the maximum permissible voltage, a fault burning set (*see* **17.2.4.1**) can be used. Where a large bank of capacitors is not available, healthy cores can be employed as a capacitor as shown in Fig. 42.

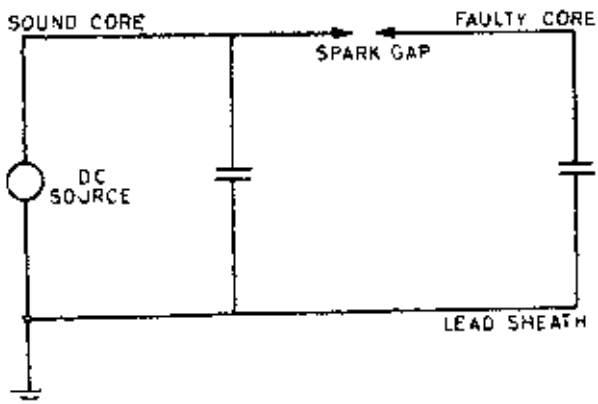

FIG. 42 CAPACITOR DISCHARGE TEST USING HEALTHY CORE AS CAPACITOR

17.3.11 *Pulse Echo Test* -- This is a confirmatory test for pinpointing a fault after an initial classic test for locating the fault within a short region is carried out. Pulse echo test which now supersedes original radar test, is an acoustic method of fault location. Within reasonable accuracy, by using controlled capacitor discharge and is particularly useful where excavation in the faulty region is difficult or restricted.

A solid state switching (ignition) is used in a triggering device for discharge of a capacitor into the one fault at regular intervals and by listening on the surface of the ground in the faulty region above the cable run through a crystal probe detector coupled to a portable amplifier or similar other hearing aids.

17.3.12 *Acoustic Cable Tracing and Fault Locator* — This test set is used for fault determination as well as route tracing of buried cables. The design is based on the principle that the conductor, carrying alternating current will give rise to a magnetic field and a coil with its axis at right-angles to the conductor will have an induced emf which may be made into 'AUDIBLE' or 'VISIBLE' by suitable amplification. In multicore cables, alternating current supplied to two cores or in one core and the sheath, will have an external magnetic field pattern that follows the helical lay at the point of short circuit.

The acoustic detector, however, is not considered to be reliable for high resistance (more than 100 ohms) faults for locating a single phase to earth fault due to signal spread.

In tracing a buried cable, an alternating current is supplied between earth and a single conductor, the remote end of the same conductor earth and being earthed. The field intensity in such case, will not fluctuate but will be steady along the cable route. It is also possible to trace a 'live' cable by connecting a suitable pulse generator as a load to the feeder cable which is automatically switched 'off' and 'on' at predetermined regular interval, and inductive probe being used to trace the cable route at mains supply frequency.

APPENDIX A

(*Clauses* 3.2 *and* 4.2.1.1)

CONSTRUCTIONAL DETAILS OF POWER CABLES

A-1. PAPER INSULATED CABLES

A-1.1 Typical constructions and possible uses of paper insulated cables are shown in Fig. 43.

A-2. PVC INSULATED CABLES

A-2.1 Typical constructions of cables indicating their possible uses are shown in Fig. 44

1. Conductor
2. Conductor screening
3. Impregnated paper insulation
4. Screening (metallised paper)
5. CWF tape
6. Belt insulation
7. Lead sheath
8. Bedding
9. Armouring
10. Outer serving

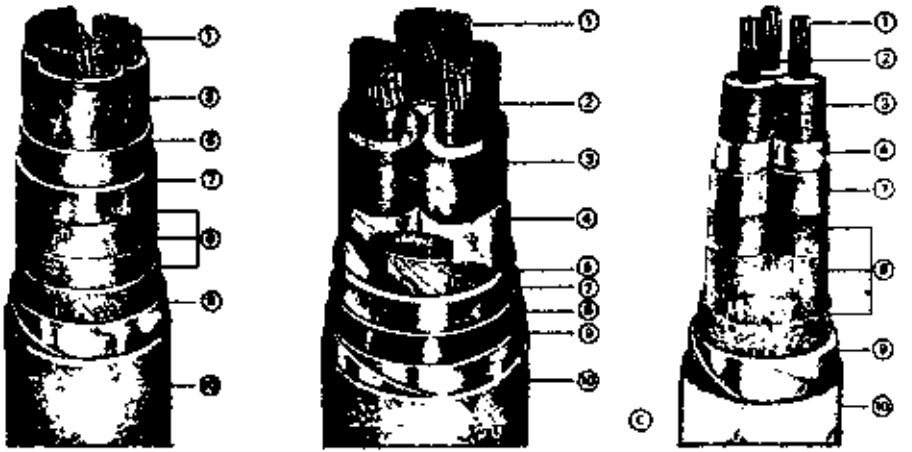

Applications : For all types of industrial and utility networks, can be buried directly in ground in cable tunnels, on cable rack in air for locations having higher chances of chemical corrosion and to reduce fire risk cables with outer PVC sheath are preferable.

FIG. 43 DIFFERENT CONSTRUCTIONS OF PAPER INSULATED CABLES

44A Unarmoured single core cable with aluminium conductors, 1·1 kV

Light weight and small permissible bending radii make single core PVC cables very easy to install. These cables are therefore particularly useful in power stations and sub-stations where a comparatively large number of cables in short lengths are to be used

44B Unarmoured multicore cables with aluminium conductors, 1·1 kV

These power cables are suitable for use in generating stations, sub-stations, house-service connections, street lighting, industrial installations, building wiring, etc. They can be installed indoors or outdoors, in air or in cable ducts

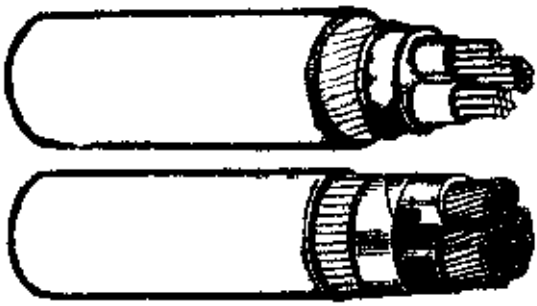

44C Armoured multicore cable with aluminium conductors, 1·1 kV

These power cables are suitable for use in generating stations, substations, distribution systems, house-service connections, street lighting, industrial installations, etc. On account of the armouring, the cables can withstand rough installation and operation conditions and tensile stresses, and can be laid in water or buried direct in the ground even on steep slopes. They can also be installed indoors or outdoors, in air or in cable ducts

44D Armoured screened multicore cable with aluminium conductors, 1·1 kV (E)

11 kV PVC cables are suitable for all types of industrial applications and particularly for hydro and thermal power stations and sub-stations. They are ideally suited for chemical and fertilizer industries on account of their better corrosion resistance or in heavy industries where severe load fluctuations occur and for systems where there are frequent over voltages.

FIG. 44 CONSTRUCTION OF PVC INSULATED CABLES

A-3. XLPE INSULATED CABLES

A-3.1 Typical construction of XLPE cables are shown in Fig. 45.

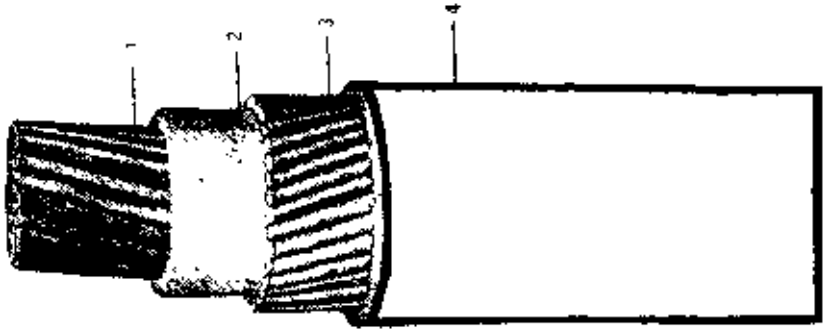

45A Single core, 1·9/3·3 kV cable, circular stranded compacted aluminium conductor, XLPE insulated, aluminium wire armoured and PVC sheathed overall

References

1 Aluminium conductor
2 XLPE insulation
3 Aluminium wire armour
4 PVC sheath

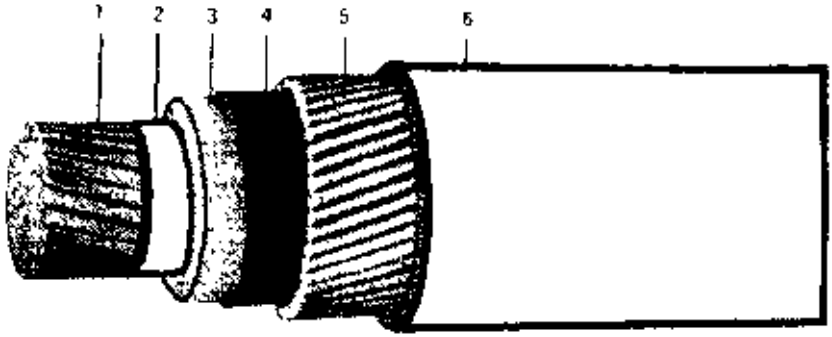

45B Single core—6·35/11 kV cable, circular stranded compacted aluminium conductor, conductor screened, XLPE insulated, insulation screened (semicon extruded), aluminium wire armoured and PVC sheathed overall

References:

1. Aluminium conductor
2. Conductor screen
3. XLPE insulation
4. Insulation screen
5. Aluminium wire armour
6. PVC sheath.

FIG. 45 TYPICAL CONSTRUCTION OF XLPE CABLES — *Contd*

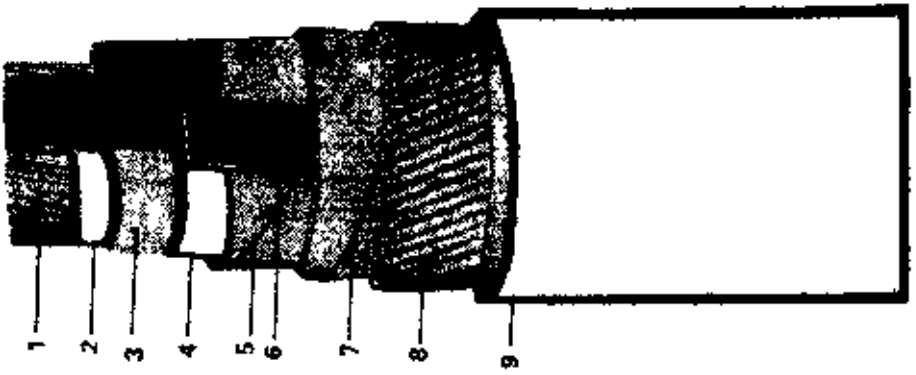

45C Three core 6·35/11 kV cable circular stranded compacted aluminium conductor, conductor screened, XLPE insulated, insulation screened (semicon extruded+aluminium tape), PVC tape bedded, steel wire armoured and PVC sheathed overall

References:

1. Aluminium conductor
2. Conductor screen
3. XLPE insulation
4. Insulation screen
5. Aluminium tape
6. Filler
7. PVC tape bedding
8. Steel wire armour
9. PVC sheath

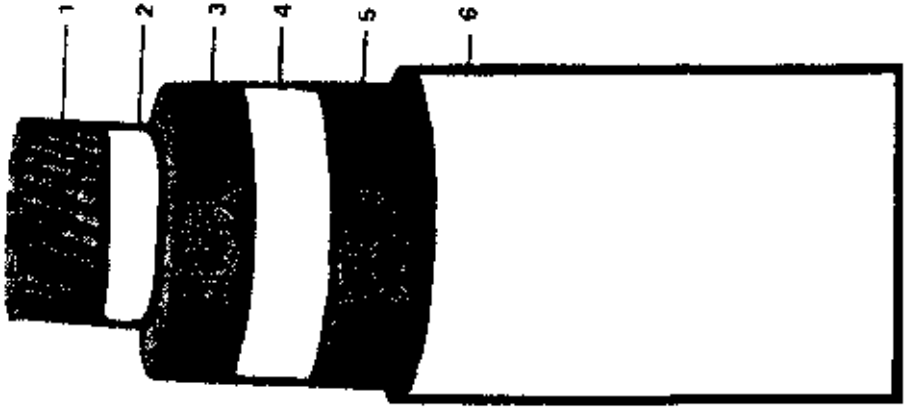

45D Single core 19/33 kV circular stranded compacted aluminium conductor, conductor screened, XLPE insulated, screened (semicon extruded + aluminium tape) and PVC sheathed overall

References:

1. Aluminium conductor
2. Conductor screen
3. XLPE insulation
4. Insulation screen
5. Aluminium tape
6. PVC sheath

FIG. 45 TYPICAL CONSTRUCTION OF XLPE CABLES

A-3.2 Applications — The preferred applications of XLPE cables are similar to that of paper and PVC insulated cables. In addition, these cables can be used:

a) on vertical runs of unlimited difference in level,

b) at locations having severe vibration problems,

c) at locations having higher ambient temperature up to 70°C,

d) at conditions demanding short time overload up to 120°C, and

e) in systems having higher short circuit levels.

APPENDIX B
(*Clause* 6.2.1)

RELATIVE MERITS/DEMERITS OF DIFFERENT METHODS OF CABLE LAYING

Sl. No.	Subject	Direct in Ground	Laid in Duct	Laid on Racks in Air	Laid Inside Tunnel
1.	Application	General application for all site conditions and types of distribution.	Normally for short-runs across railway carriages way, etc, but extensively used in American cabling practice	In factories, power stations, sub-stations, etc, usually joints are eliminated on racks	In power stations, switching yards, control rooms where a large number of cables run in parallel
2.	Preferred type of cable finish	Armoured having ordinary/special servings	Unarmoured with or without ordinary serving	Armoured or unarmoured	Armoured or unarmoured
3.	Conductor economy or current carrying capacity	Very good	Poor	Good if sunshields are provided	Fair if well ventilated
4.	Initial preparatory work before laying	Nominal	Most significant	Significant	Most significant
5.	Initial cost of laying	Comparatively low	Higher	High	Highest
6.	Cost of repair and maintenance	Highest	High	Fair	Low
7.	Time requirement for locating a fault	Significant	Most significant	Little	Little
8.	Cost of cable replacement for load growth	High	Low	Lower	Lowest

9.	Cost of cable for repairing following a fault	Least	Highest	High	Low
10.	Susceptibility to electrolytic/galvanic corrosion	Considerable	Infrequent	Little	Little
11.	Susceptibility to cable sheath failure by inter-crystaline fatigue	Little	Little	Considerable	Considerable
12.	Susceptibility to mechanical damage	Considerable	Infrequent	Little	Negligible
13.	Damage to adjacent cables following a fault in a cable	Rare	Huge	Considerable	Considerable
14.	Special precautions necessary	Nominal but special care may be required in aggressive site conditions	a) Care against abrasion during pulling	a) Protection to cable at clamp position	a) Protection to cable at clamp position
			b) Proper alignment of duct	b) Insulating the cable at metallic clamp positions	b) Insulating the cable at metallic clamp positions
			c) Precautions against damage to cable at duct entry positions	c) Provision to reduce thrust at joints, if any	c) Provision to reduce thrust at joints position
			d) Provision for pumping water from manholes		d) Provision for drafting of accumulated water ventilation and lighting

BUREAU OF INDIAN STANDARDS

Headquarters:

Manak Bhavan, 9 Bahadur Shah Zafar Marg, NEW DELHI 110002
Telephones: 323 0131, 323 3375, 323 9402
Fax : 91 11 3234062, 91 11 3239399, 91 11 3239382

Telegrams : Manaksanstha
(Common to all Offices)

	Telephone
Central Laboratory:	
Plot No. 20/9, Site IV, Sahibabad Industrial Area, Sahibabad 201010	8-77 00 32
Regional Offices:	
Central : Manak Bhavan, 9 Bahadur Shah Zafar Marg, NEW DELHI 110002	323 76 17
*Eastern : 1/14 CIT Scheme VII M, V.I.P. Road, Maniktola, CALCUTTA 700054	337 86 62
Northern : SCO 335-336, Sector 34-A, CHANDIGARH 160022	60 38 43
Southern : C.I.T. Campus, IV Cross Road, CHENNAI 600113	235 23 15
†Western : Manakalaya, E9, Behind Marol Telephone Exchange, Andheri (East), MUMBAI 400093	832 92 95
Branch Offices:	
'Pushpak', Nurmohamed Shaikh Marg, Khanpur, AHMEDABAD 380001	550 13 48
‡Peenya Industrial Area, 1st Stage, Bangalore-Tumkur Road, BANGALORE 560058	839 49 55
Gangotri Complex, 5th Floor, Bhadbhada Road, T.T. Nagar, BHOPAL 462003	55 40 21
Plot No. 62-63, Unit VI, Ganga Nagar, BHUBANESHWAR 751001	40 36 27
Kalaikathir Buildings, 670 Avinashi Road, COIMBATORE 641037	21 01 41
Plot No. 43, Sector 16 A, Mathura Road, FARIDABAD 121001	8-28 88 01
Savitri Complex, 116 G.T. Road, GHAZIABAD 201001	8-71 19 96
53/5 Ward No. 29, R.G. Barua Road, 5th By-lane, GUWAHATI 781003	54 11 37
5-8-56C, L.N. Gupta Marg, Nampally Station Road, HYDERABAD 500001	20 10 83
E-52, Chitaranjan Marg, C-Scheme, JAIPUR 302001	37 29 25
117/418 B, Sarvodaya Nagar, KANPUR 208005	21 68 76
Seth Bhawan, 2nd Floor, Behind Leela Cinema, Naval Kishore Road, LUCKNOW 226001	23 89 23
NIT Building, Second Floor, Gokulpal Market, NAGPUR 440010	52 51 71
Patliputra Industrial Estate, PATNA 800013	26 23 05
Institution of Engineers (India) Building 1332 Shivaji Nagar, PUNE 411005	32 36 35
T.C. No. 14/1421, University P.O. Palayam, THIRUVANANTHAPURAM 695034	6 21 17

*Sales Office is at 5 Chowringhee Approach, P.O. Princep Street, CALCUTTA 700072 — 27 10 85

†Sales Office is at Novelty Chambers, Grant Road, MUMBAI 400007 — 309 65 28

‡Sales Office is at 'F' Block, Unity Building, Narashimaraja Square, BANGALORE 560002 — 222 39 71

Printed at Simco Printing Press, Delhi